Name	Schematic Name	Page	Name	Schematic Name	Page
Top		1			18
		2			19
		3			20
		4			21
		5			22
		6			23
		7			24
		8			
		9			
		10			
		11			
		12			
		13			
		14			
		15			
		16			
		17			

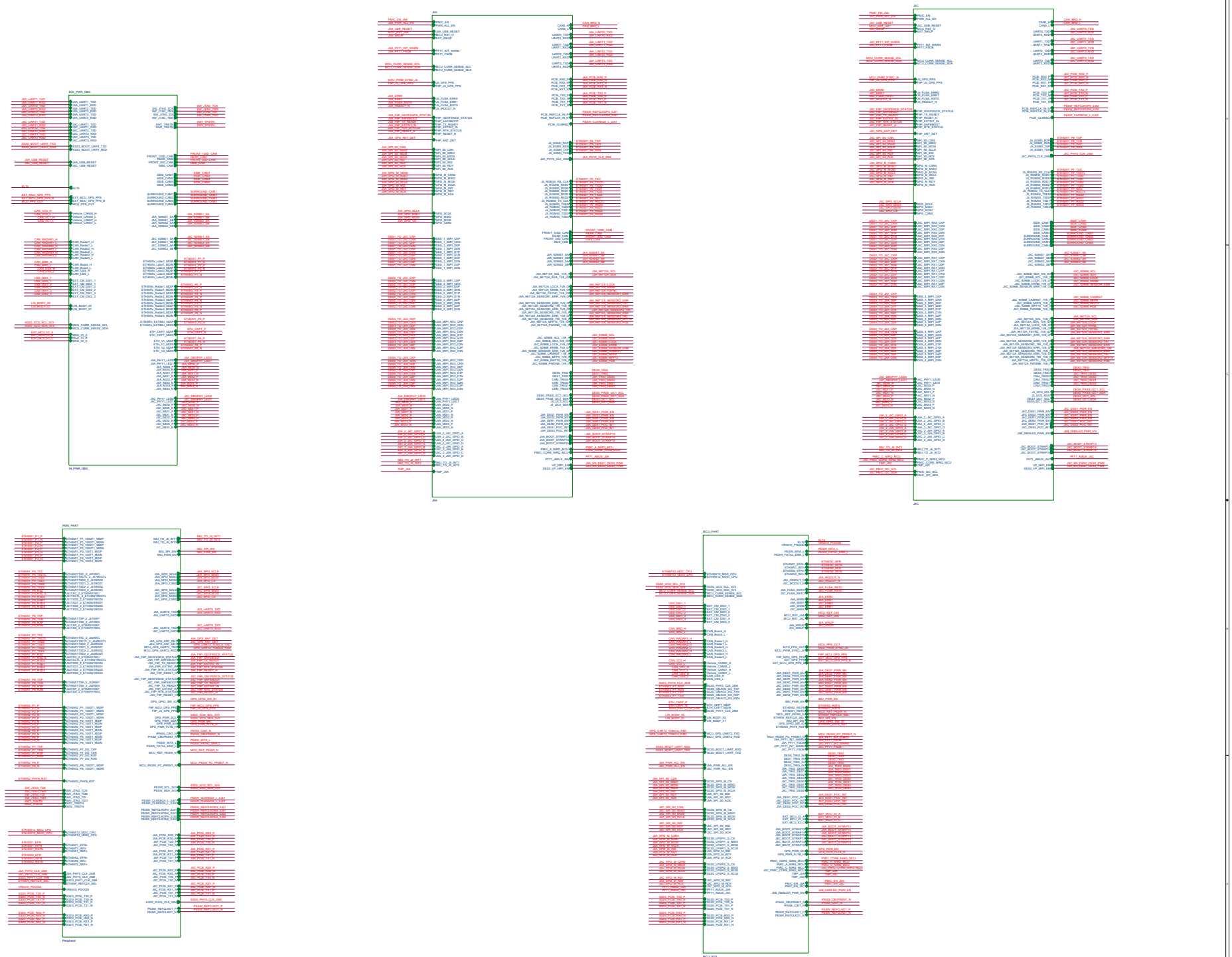

Horizon Robotics

CONFIDENTIAL

NAME: sb_tsp	VERSION: <version>
PROJECT: sb_pvb	
DESIGNER: Horizon Robotics	
DRAWING DATE: 2020/08	
PAGE: 3 of 66	

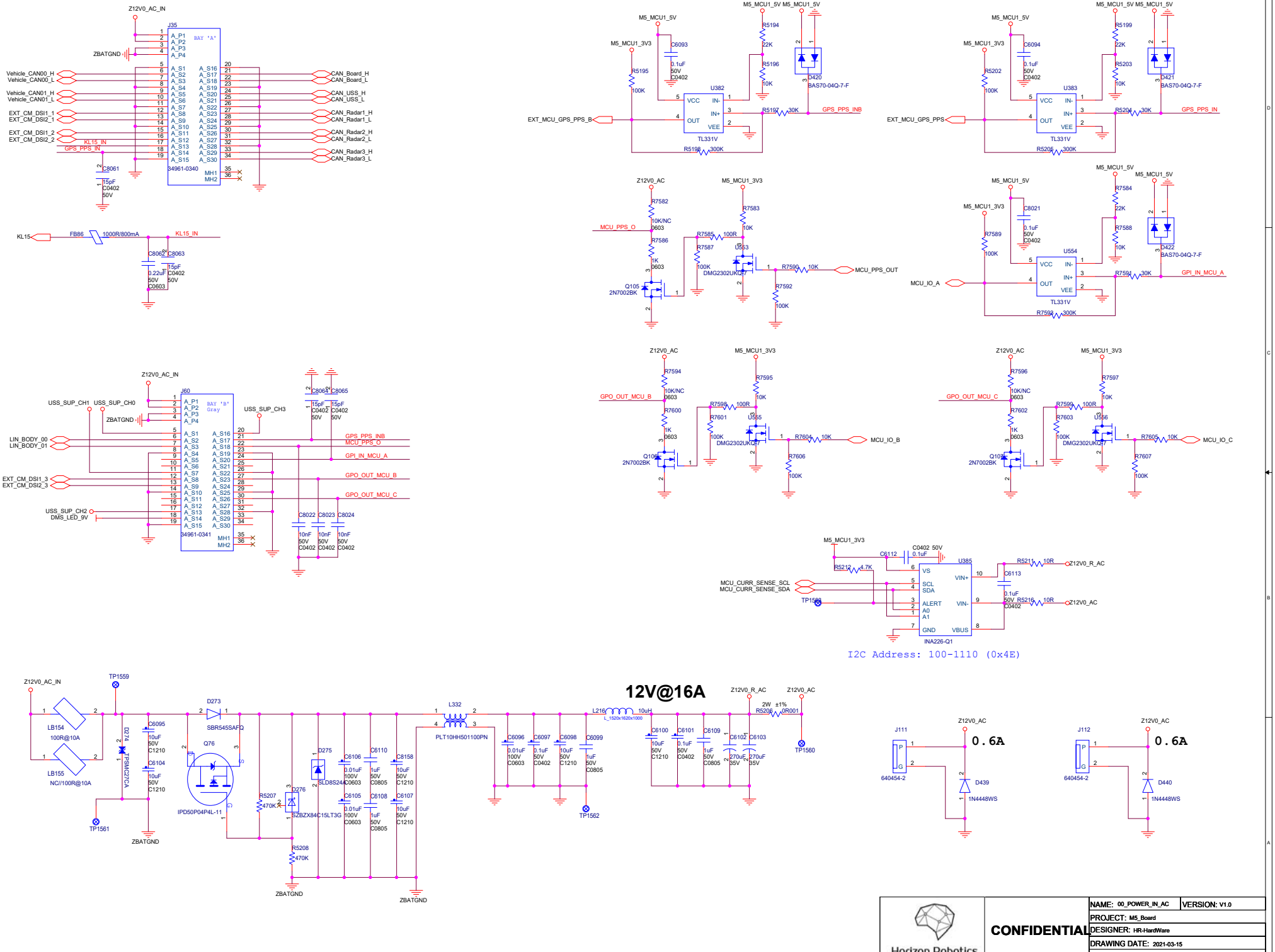
Z12V0_AC_IN
J35
BAY 'A'
ZBATGND
Vehicle_CAN00_H
Vehicle_CAN00_L
Vehicle_CAN01_H
Vehicle_CAN01_L
EXT_CM_DSI1_1
EXT_CM_DSI2_1
EXT_CM_DSI1_2
EXT_CM_DSI2_2
KL15_IN
GPS_PPS_IN
CAN_Board_H
CAN_Board_L
CAN_USS_H
CAN_USS_L
CAN_Radar1_H
CAN_Radar1_L
CAN_Radar2_H
CAN_Radar2_L
CAN_Radar3_H
CAN_Radar3_L
34961-0340
C8061
15pF
C0402
50V
KL15
FB86
1000R/800mA
C8062
C8063
0.22uF
C0603
M5_MCU1_5V
M5_MCU1_3V3
C6093
0.1uF
C0402
R5195
100K
U382
VCC
IN-
IN+
VEE
OUT
TL331V
R5194
22K
R5196
10K
D420
BAS70-04Q-7-F
R5197
30K
R5198
300K
EXT_MCU_GPS_PPS_B
GPS_PPS_INB
C6094
R5202
R5199
R5203
U383
D421
R5204
R5206
EXT_MCU_GPS_PPS
GPS_PPS_IN
Z12V0_AC
MCU_PPS_O
R7582
10K/NC
0603
R7586
1K
R7583
10K
R7585
100R
R7587
U353
DMG2302UKQ-7
R7590
MCU_PPS_OUT
R7592
Q105
2N7002BK
C8021
R7589
R7584
R7588
U554
D422
R7594
MCU_IO_A
GPI_IN_MCU_A
GPO_OUT_MCU_B
R7595
R7600
R7601
U355
R7604
MCU_IO_B
R7606
GPO_OUT_MCU_C
R7596
R7602
R7603
U356
R7605
MCU_IO_C
R7607
J60
BAY 'B'
Gray
USS_SUP_CH1
USS_SUP_CH0
USS_SUP_CH3
USS_SUP_CH2
DMS_LED_9V
LIN_BODY_00
LIN_BODY_01
EXT_CM_DSI1_3
EXT_CM_DSI2_3
34961-0341
C8064
C8065
C8022
C8023
C8024
10nF
C0402
M5_MCU1_3V3
C6112
C0402 50V
0.1uF
R5212
4.7K
U385
VS
SCL
SDA
ALERT
A0
A1
GND
VBUS
VIN+
VIN-
INA226-Q1
R5211
10R
R5216
C6113
MCU_CURR_SENSE_SCL
MCU_CURR_SENSE_SDA
TP1563
I2C Address: 100-1110 (0x4E)
12V@16A
TP1559
LB154
100R@10A
LB155
NC//100R@10A
D273
SBR545SAFQ
Q76
IPD50P04P4L-11
D275
SLD8S24
D276
SZBZX84C15LT3G
R5207
470K
R5208
L332
PLT10HH501100PN
L216
10uH
L_1520x1620x1000
R5209
2W ±1%
0R001
TP1560
TP1561
TP1562
C6095
C6104
C6106
C6110
C8158
C6105
C6108
C6107
C6096
C6097
C6098
C6099
C6100
C6101
C6109
C6102
C6103
270uF
35V
J111
J112
640454-2
D439
D440
1N4448WS
0.6A
NAME: 00_POWER_IN_AC
VERSION: V1.0
PROJECT: M5_Board
DESIGNER: HR-HardWare
DRAWING DATE: 2021-03-15
PAGE: 3 of 69
CONFIDENTIAL
Horizon Robotics

J5A/MCU DEBUG

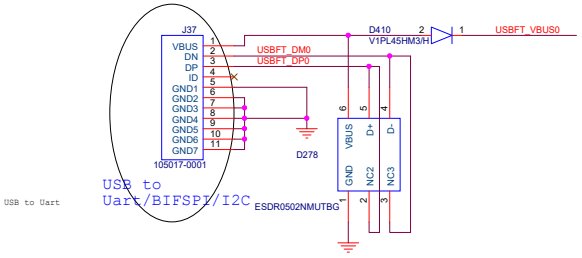

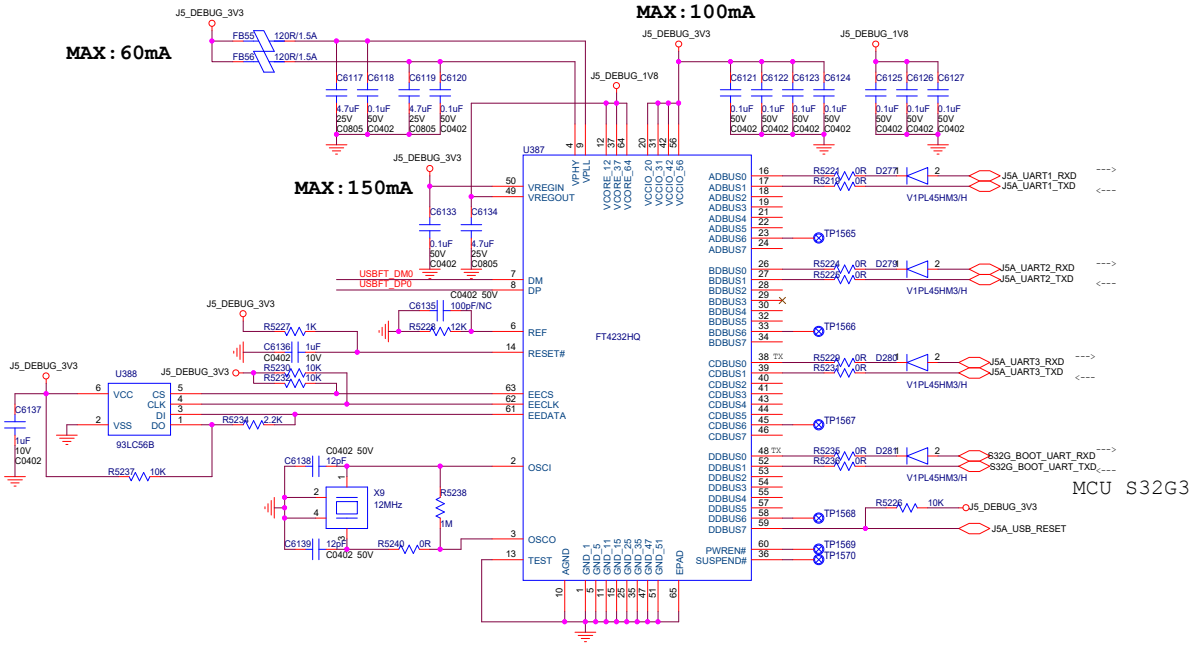

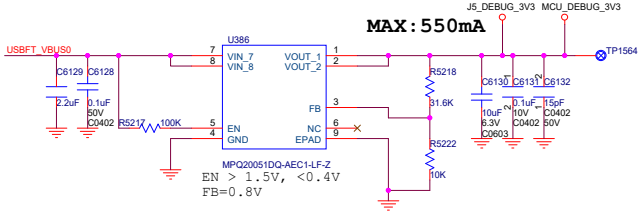

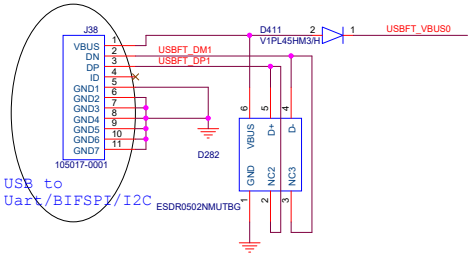

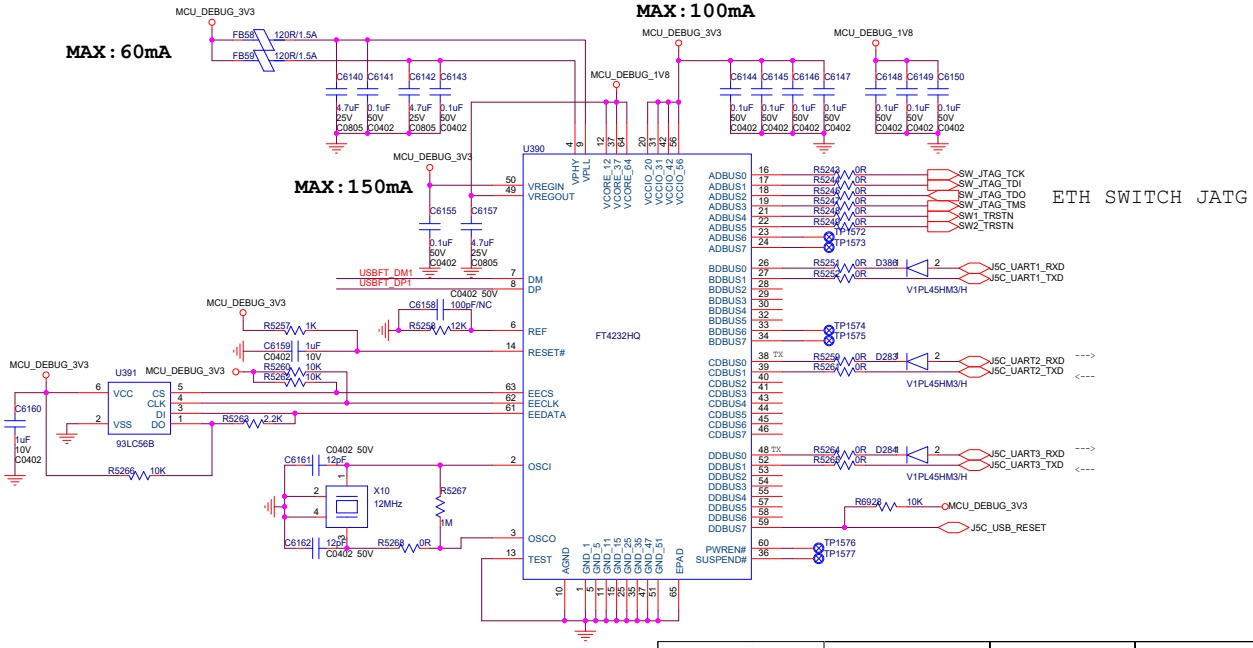

J5C & ETH DEBUG

Horizon Robotics

CONFIDENTIAL

NAME: 03_Top	VERSION: <version>
PROJECT: J5_DVB	
DESIGNER: Horizon Robotics	
DRAWING DATE: 20210128	
PAGE: 4 of 69	

J5A

J5C

GMSL IN / OUT

RX

TX

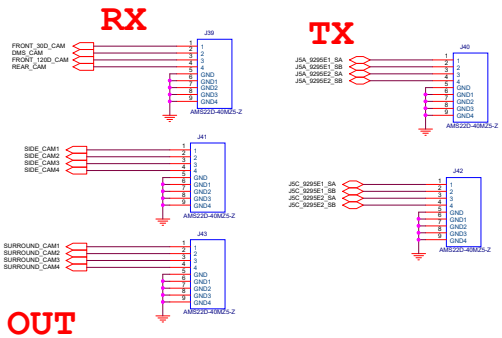

Ethernet 100M/1000M-T1

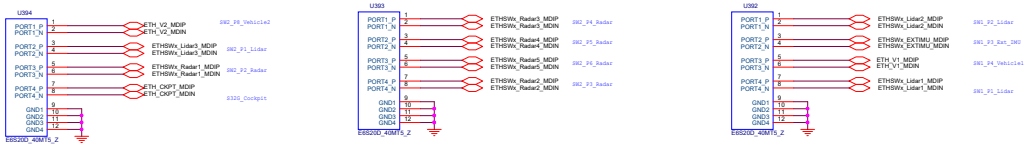

Signal map could swap

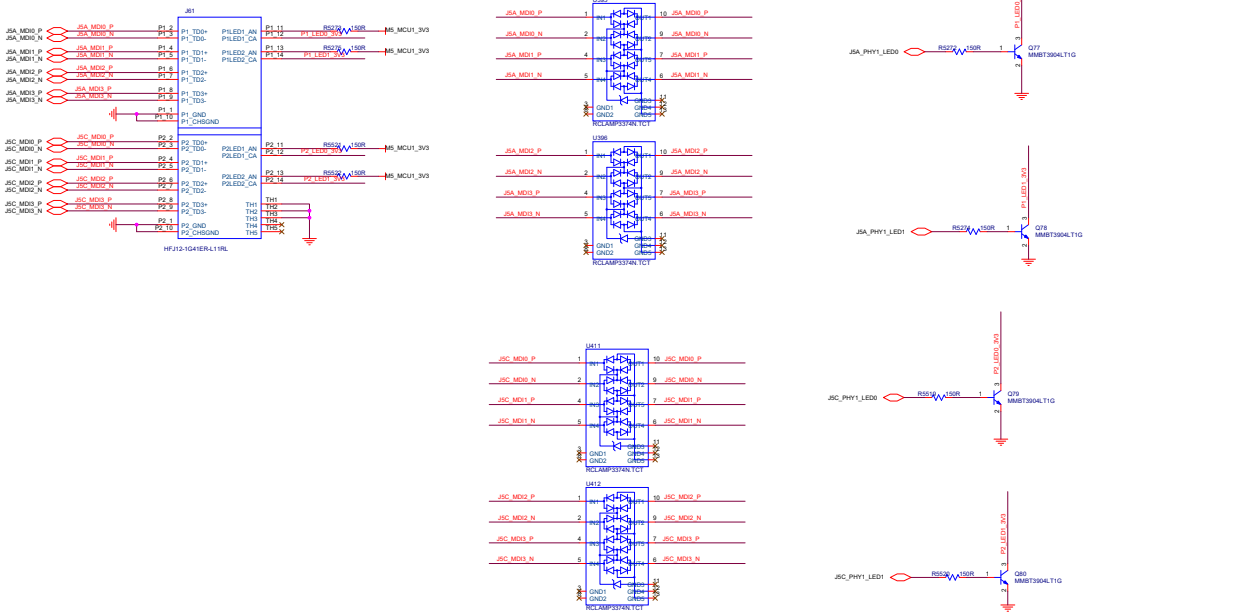

MECH

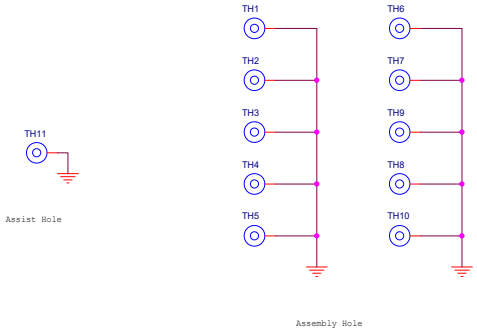

Page Name: 04_EMC_Shield	
Project: <Title>	Rev: <RevCode>
Designer:	
Date: Wednesday, April 27, 2022	
Sheet 6 of 69	

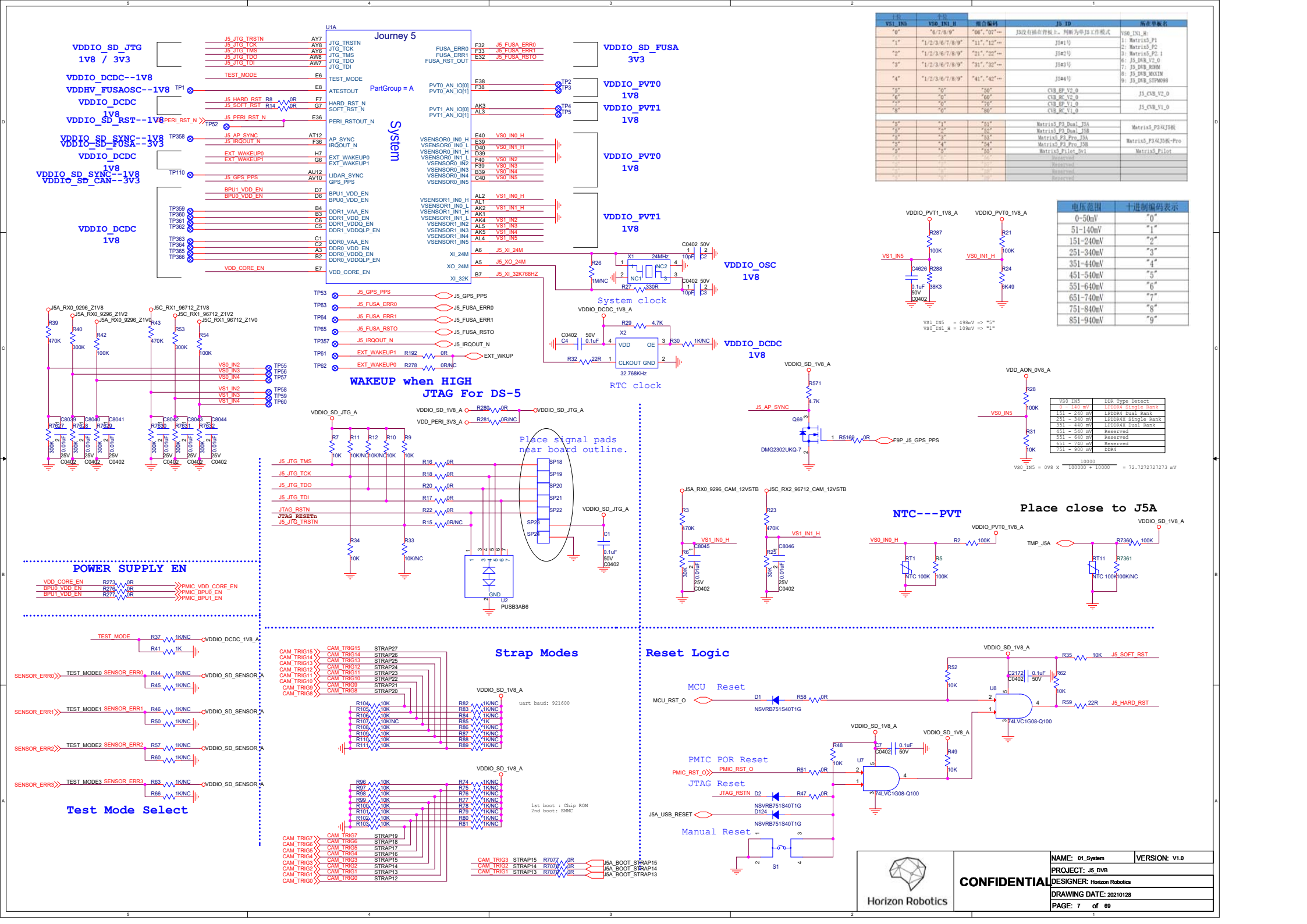

VS1_IN5	VS0_IN1_H	组合编码	J5_TD	所在单板名
"0"	"6/7/8/9"	"06","07"...	J5没有插在背板上，判断为单J5工作模式	VS0_IN1_H: 1: Matrix5_P1 2: Matrix5_P2 3: Matrix5_P2.1 6: J5_DVB_V2_0 7: J5_DVB_ROHM 8: J5_DVB_MAXIM 9: J5_DVB_STPM098
"1"	"1/2/3/6/7/8/9"	"11","12"...	J5#1号	
"2"	"1/2/3/6/7/8/9"	"21","22"...	J5#2号	
"3"	"1/2/3/6/7/8/9"	"31","32"...	J5#3号	
"4"	"1/2/3/6/7/8/9"	"41","42"...	J5#4号	
"5"	"0"	"50"	CVB_EP_V2_0	J5_CVB_V2_0
"6"	"0"	"60"	CVB_RC_V2_0	
"7"	"0"	"70"	CVB_EP_V1_0	J5_CVB_V1_0
"8"	"0"	"80"	CVB_RC_V1_0	
"5"	"1"	"51"	Matrix5_P3_Dual_J5A	Matrix5_P3&J5板
"6"	"1"	"61"	Matrix5_P3_Dual_J5B	
"7"	"1"	"71"	Matrix5_P3_Pro_J5A	Matrix5_P3&J5&J5H-Pro
"8"	"1"	"81"	Matrix5_P3_Pro_J5B	
"9"	"1"	"91"	Matrix5_Pilot_3v1	Matrix5_Pilot
"A"	"1"	"A1"	Reserved	
"B"	"1"	"B1"	Reserved	
"C"	"1"	"C1"	Reserved	
"D"	"1"	"D1"	Reserved	

电压范围	十进制编码表示
0~50mV	"0"
51~140mV	"1"
151~240mV	"2"
251~340mV	"3"
351~440mV	"4"
451~540mV	"5"
551~640mV	"6"
651~740mV	"7"
751~840mV	"8"
851~940mV	"9"

VS1_IN5 = 498mV => "5"
VS0_IN1_H = 109mV => "1"

VS0_IN5	DDR Type Detect
0 ~ 150 mV	LPDDR4 Single Rank
151 ~ 240 mV	LPDDR4 Dual Rank
251 ~ 340 mV	LPDDR4X Single Rank
351 ~ 440 mV	LPDDR4X Dual Rank
451 ~ 540 mV	Reserved
551 ~ 640 mV	Reserved
651 ~ 740 mV	Reserved
751 ~ 900 mV	DDR4

VS0_IN5 = 0V8 X 10000 / (100000 + 10000) = 72.7272727273 mV

SK DDR Design guide:
(1) VDD1 : one de-cap for VDD1/VSS per about two VDD1 balls
(2) VDD2 : 100nF*3+1uF per DRAM die
(3) VDDQ : 100nF*4+4.7uF per DRAM die

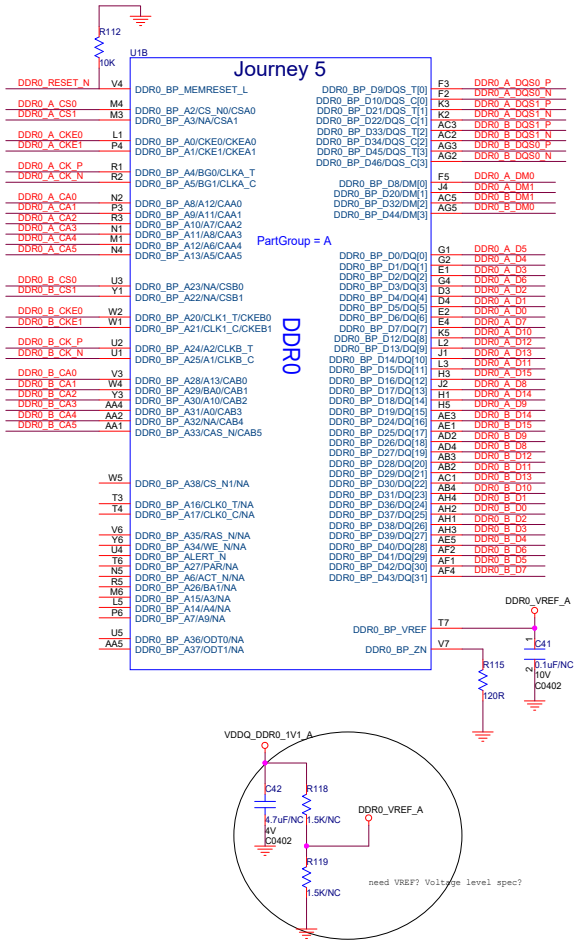

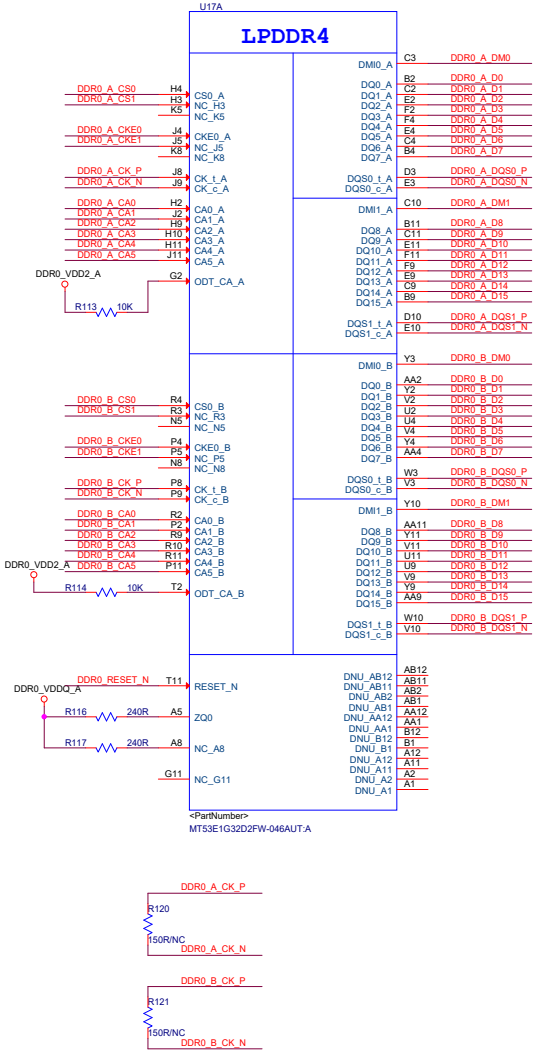

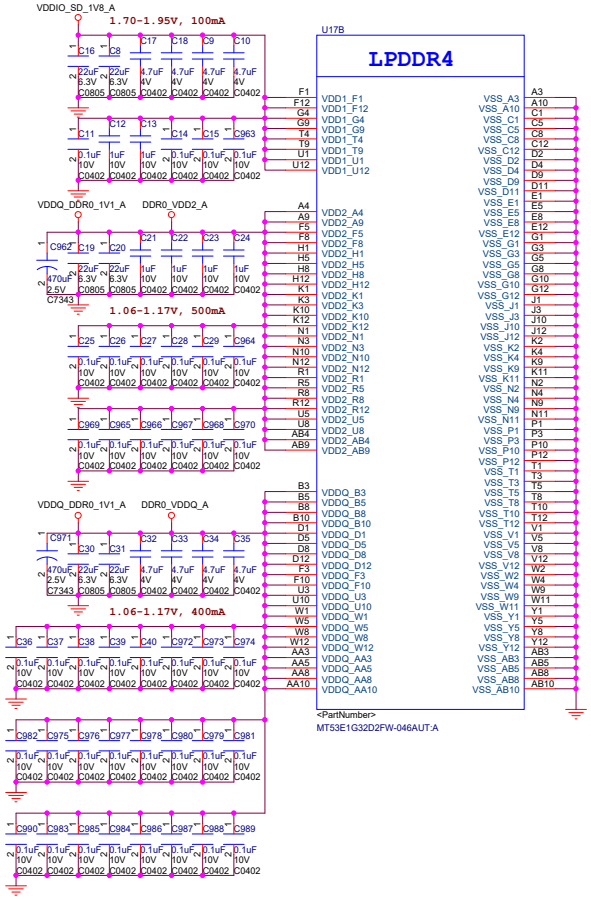

Horizon Robotics	CONFIDENTIAL	NAME: 02_DDRC0	VERSION: V1.0
		PROJECT: J5_DVB	
		DESIGNER: Horizon Robotics	
		DRAWING DATE: 20210128	
		PAGE: 8 of 69	

SK DDR Design guide:
(1) VDD1 : one de-cap for VDD1/VSS per about two VDD1 balls
(2) VDD2 : 100nF*3+1uF per DRAM die
(3) VDDQ : 100nF*4+4.7uF per DRAM die

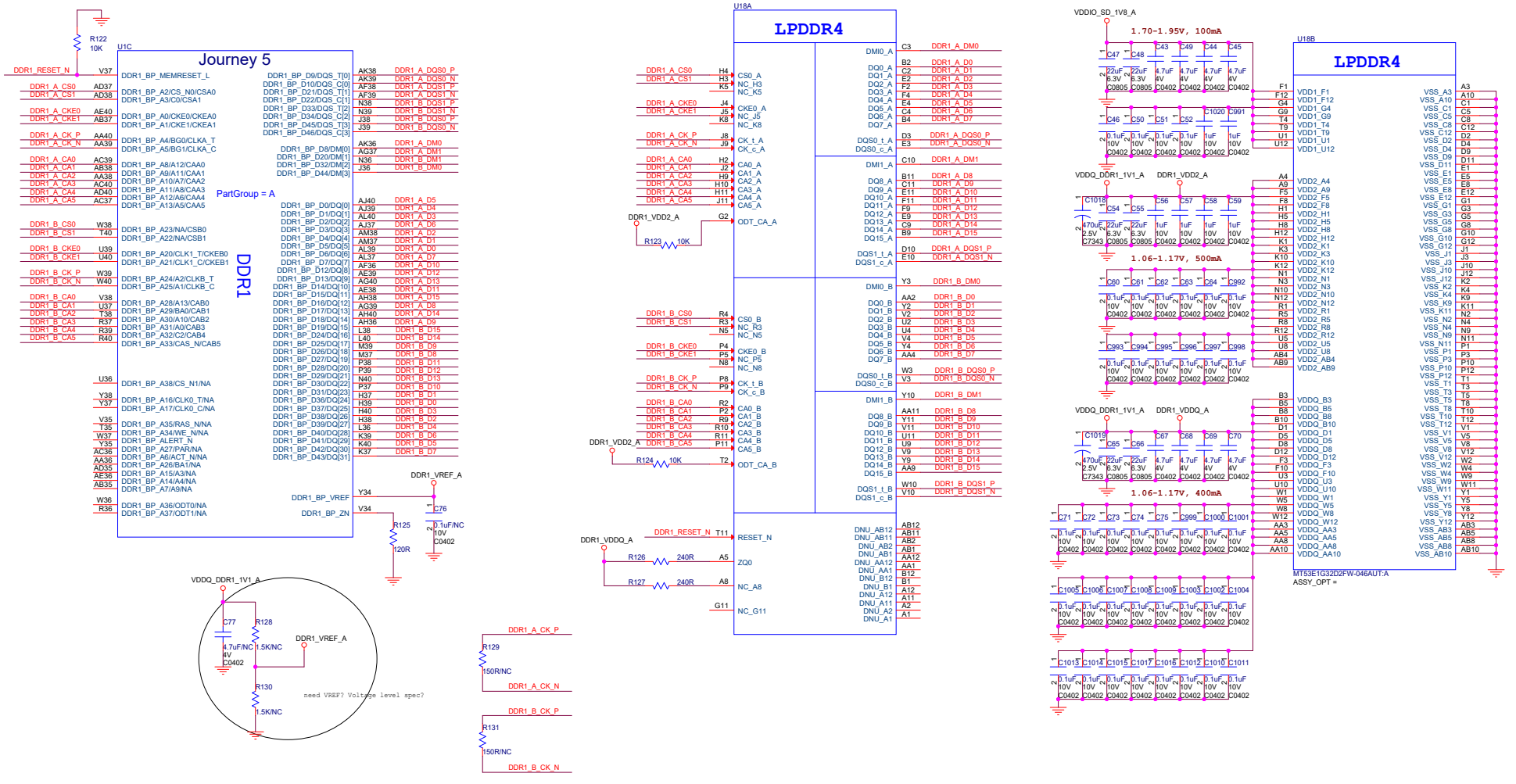

Horizon Robotics	CONFIDENTIAL	NAME: 03_DDRC1	VERSION: V1.0
		PROJECT: J5_DVB	
		DESIGNER: Horizon Robotics	
		DRAWING DATE: 20210128	
		PAGE: 9 of 69	

SD_BUS_POW: control PMIC
    1 to switch on SD socket 3.3V supply, 0 to switch off the supply.

SD_1V8: control PMIC:
    1 -> enable to change VDDIO of SoC SDIO to 1.8V,
    0-> VDDIO change back to default 3.3V.

SD_BUS_VOLT[0:2]: control PMIC,
    select voltage level for VDDIO, maybe fixed to 3.0V or 3.3V

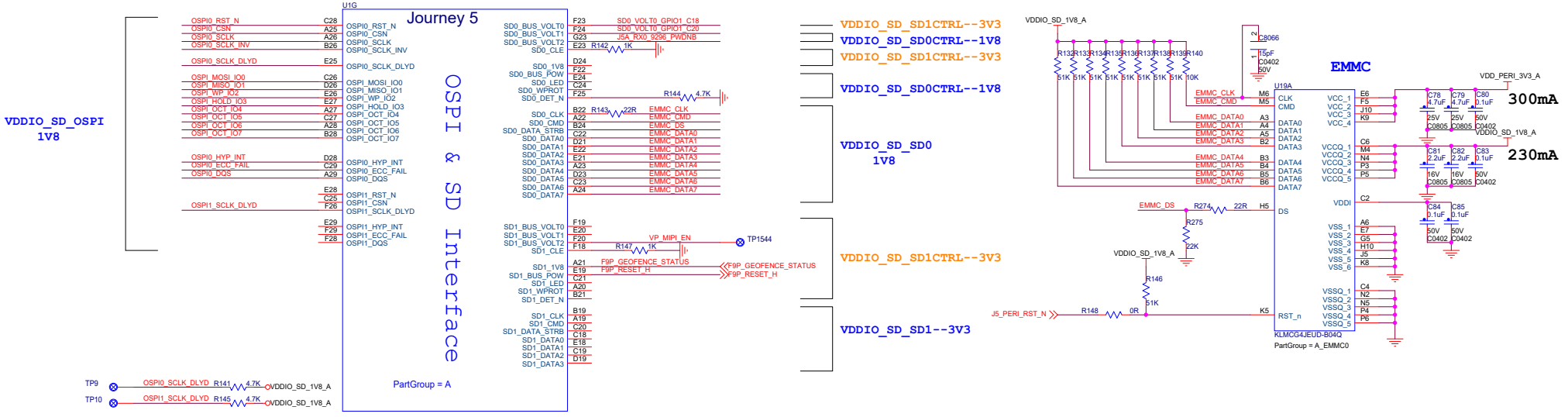

Debug for MCore

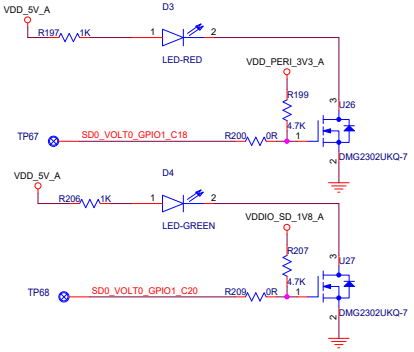

Hyper Flash

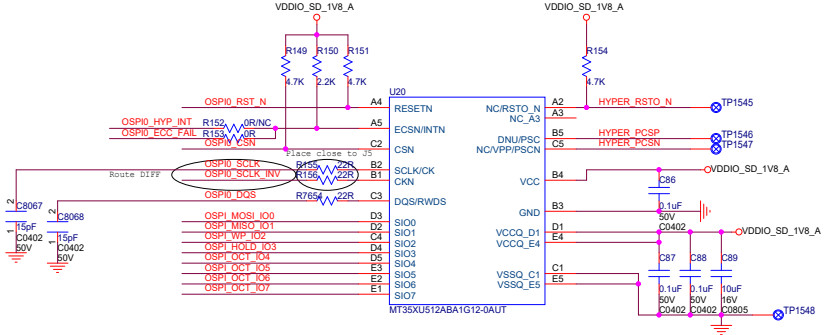

Xccela : 120mA
Hyper : 300mA

Horizon Robotics	CONFIDENTIAL	NAME: 04_Boot_flash VERSION: V1.0
		PROJECT: J5_DVB
		DESIGNER: Horizon Robotics
		DRAWING DATE: 20210128
		PAGE: 10 of 69

VDDIO_SD_SPI2/3/S0/BIFSPI--3V3

VDDIO_SD_SPI0/1--1V8

BIFSPI 1.8V

F9P_GEOFENCE_STATUS
F9P_SAFEBOOT
F9P_TX_READY
F9P_EXTINT_IN
F9P_RTK_STATUS
F9P_RESET_H

F9P_GEOFENCE_STATUS
F9P_SAFEBOOT
F9P_TX_READY
F9P_EXTINT_IN
F9P_RTK_STATUS
F9P_RESET_H

F9P_GEOFENCE_STATUS
F9P_RESET_H

U1H

Journey 5 Misc Interfaces

PartGroup = A

BIFSPI_RSTN AN5
BIFSPI_SCLK AR5
BIFSPI_CSN AP6
BIFSPI_MISO AN6
BIFSPI_MOSI AP5
1V8

SPI_S0_CSN A34
SPI_S0_SCLK B34
SPI_S0_MISO E33
SPI_S0_MOSI C33
3V3

SPI_S0_CSN
SPI_S0_SCLK
SPI_S0_MISO
SPI_S0_MOSI

SPI_S0_RDY
SPI_S0_IND
SPI_S0_ACK

SPI_S0_ACK A36
SPI2_M_ACK B36
J5A_2_J5C_GPIO_A B37
J5A_2_J5C_GPIO_B A37
J5A_2_J5C_GPIO_C C36
J5A_2_J5C_GPIO_D A38
SPI0_CSN0
SPI0_CSN1
SPI0_SCLK
SPI0_MISO
SPI0_MOSI
3V3

SPI2_M_RDY
SPI2_M_IND
SPI2_M_ACK

J5C_2_J5A_GPIO_A C37
J5C_2_J5A_GPIO_B D37
J5C_2_J5A_GPIO_C C38
J5C_2_J5A_GPIO_D E37
SPI1_CSN0
SPI1_CSN1
SPI1_SCLK
SPI1_MISO
SPI1_MOSI
3V3

SPI2_M_CSN0 AU7
SPI2_M_SCLK AV6
SPI2_M_MISO AU5
SPI2_M_MOSI AT6
SPI2_CSN0
SPI2_CSN1
SPI2_SCLK
SPI2_MISO
SPI2_MOSI
3V3

SPI3_CSN0 A32
SPI3_SCLK B32
SPI3_MISO A33
SPI3_MOSI D32
SPI3_CSN0
SPI3_CSN1
SPI3_SCLK
SPI3_MISO
SPI3_MOSI
3V3

PHY0_RST_N B30
CORE_PWMVIDA C30
CORE_PSIA A30
CORE_PMIC_NIRQ_J5A D30
I2S0_BCLK
I2S0_LRCK
I2S0_MCLK
I2S0_SDIO0
I2S0_SDIO1
R7428 0R
R7433 0R
R7434 0R
1V8

BPU_PSIA C31
BPU_PSIB E31
BPU_PWMVIDA A31
BPU_PWMVIDB F31
PMIC_NIRQ_J5 F30
I2S1_BCLK
I2S1_LRCK
I2S1_MCLK
I2S1_SDIO0
I2S1_SDIO1
R7432 0R
R7435 0R
R7436 0R
R7437 0R
R7438 0R
1V8

UART0_CTSN F34
UART0_RTSN E34
UART0_RXD D34
UART0_TXD C34
UART1_RXD AU11
UART1_TXD AT11
UART2_RXD AP11
UART2_TXD AR11
UART3_RXD AW10
UART3_TXD AY11

UART0_RXD
UART0_TXD
UART1_RXD
UART1_TXD
UART2_RXD
UART2_TXD
UART3_RXD
UART3_TXD

CAN0_FD_EN AW9
CAN0_FD_STB AU9
CAN0_TX AU10
CAN0_RX AY9
CAN0_STB
CAN0_TX
CAN0_RX

CAN1_FD_EN AR9
CAN1_FD_STB AP9
CAN1_TX AT10
CAN1_RX AP10
F9P_ANT_DET
IMU_TO_J5_INT2
F9P_SAFEBOOT
F9P_TX_READY

CAN2_FD_EN AT8
CAN2_FD_STB AU8
CAN2_TX AT9
CAN2_RX AV8
IMU_TO_J5_INT1
F9P_EXTINT_IN
F9P_RTK_STATUS

CAN3_FD_EN AP7
CAN3_FD_STB AR7
CAN3_TX AP8
CAN3_RX AT7
SPI_S0_RDY
SPI_S0_IND
SPI2_M_RDY
SPI2_M_IND

PCIE_CLKREQ D13 R92 0R PCIE_CLKREQ
PCIE_REF_CLK_IN_P D9 PCIE_REFCLK_IN_P
PCIE_REF_CLK_IN_N C8 PCIE_REFCLK_IN_N
PCIE_REF_CLK_OUT_INV D12
PCIE_REF_CLK_OUT C11

PCIE_TX0_P B13 PCIE_C_TX0_P C99 0.22uF PCIE_TX0_P
PCIE_TX0_N A12 PCIE_C_TX0_N C98 0.22uF PCIE_TX0_N
PCIE_TX1_P B12 PCIE_C_TX1_P C97 0.22uF PCIE_TX1_P
PCIE_TX1_N A11 PCIE_C_TX1_N C100 0.22uF PCIE_TX1_N

PCIE_RX0_P B10 PCIE_RX0_P
PCIE_RX0_N A9 PCIE_RX0_N
PCIE_RX1_P B9 PCIE_RX1_P
PCIE_RX1_N A8 PCIE_RX1_N

PCIE_RESREF E11 R178 200R

VDD_PERI_3V3_A

UART0_RXD R6962 30K
UART0_TXD R6963 30K/NC
UART1_RXD R6964 30K
UART1_TXD R6965 30K/NC
UART2_RXD R6966 30K
UART2_TXD R6967 30K/NC
UART3_RXD R5187 30K
UART3_TXD R5191 30K/NC

VDD_PERI_3V3_A
C451 1uF 25V C0603
C452 0.1uF 50V C0402

VDD_5V_A
5V0@70mA
C453 1uF 25V C0603
C454 0.1uF 50V C0402

U4
VIO VCC CANH CANL TXD RXD STB EPAD GND
TJA1042TK/3

CAN0_TX
CAN0_RX
R286 33R
CAN0_STB
F9
ACT45C-101-2P-TL000
CAN0_H
CAN0_L

J5A_2_J5C_GPIO_A
J5A_2_J5C_GPIO_B
J5A_2_J5C_GPIO_C
J5A_2_J5C_GPIO_D

J5C_2_J5A_GPIO_A
J5C_2_J5A_GPIO_B
J5C_2_J5A_GPIO_C
J5C_2_J5A_GPIO_D

Horizon Robotics

CONFIDENTIAL

NAME: 05_Ports	VERSION: V1.0
PROJECT: J5_DVB	
DESIGNER: Horizon Robotics	
DRAWING DATE: 20210128	
PAGE: 11 of 69	

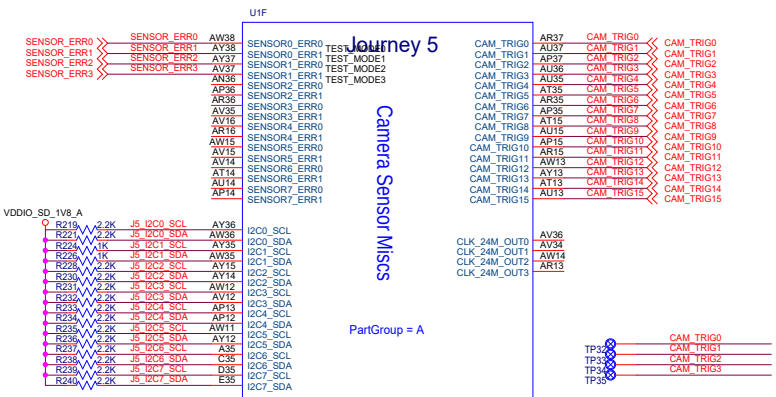

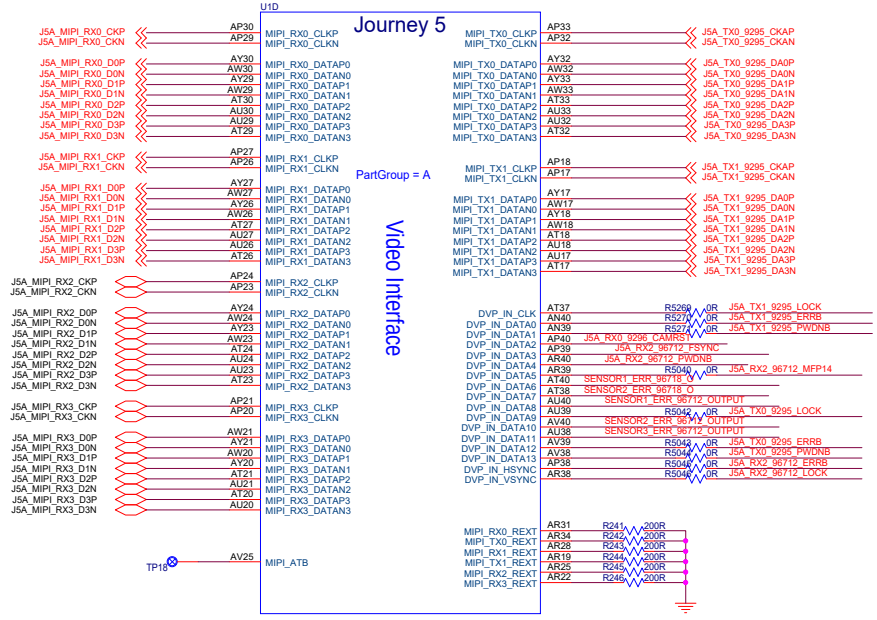

MIPI RX0

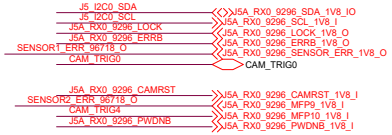

MIPI RX1

MIPI RX2

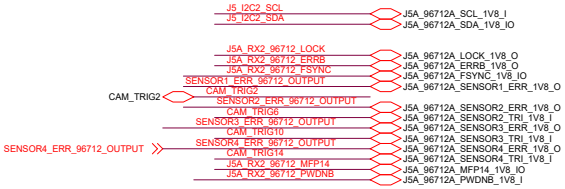

MIPI RX3

MIPI TX0

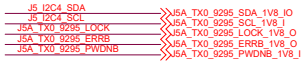

MIPI TX1

Horizon Robotics

CONFIDENTIAL

NAME: 06_Ports_MIPI_RX_TX	VERSION: V1.0
PROJECT: J5_DVB	
DESIGNER: Horizon Robotics	
DRAWING DATE: 20210128	
PAGE: 12 of 69	

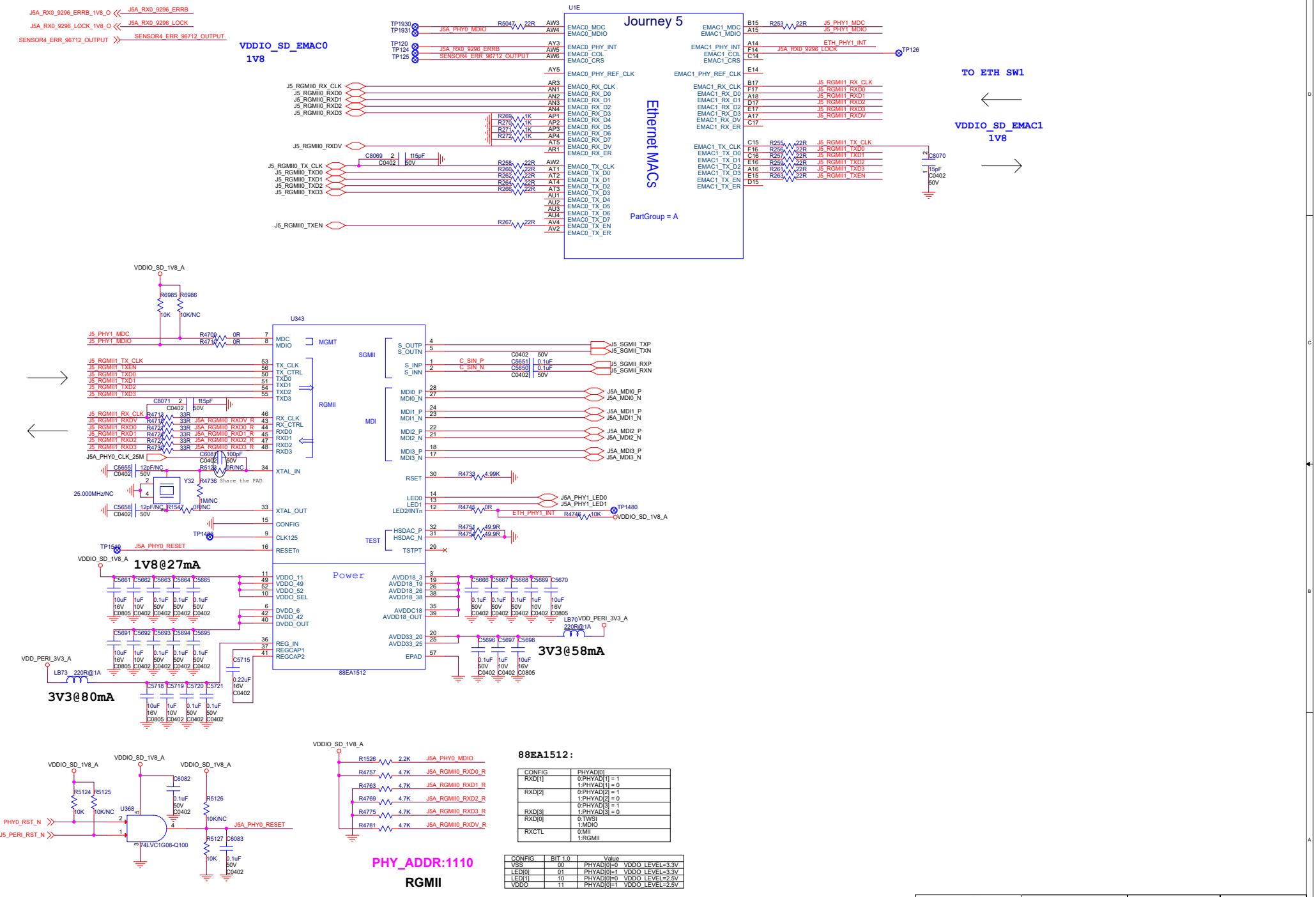

CONFIG	PHYAD[0]
RXD[1]	0:PHYAD[1] = 1 1:PHYAD[1] = 0
RXD[2]	0:PHYAD[2] = 1 1:PHYAD[2] = 0
RXD[3]	0:PHYAD[3] = 1 1:PHYAD[3] = 0
RXD[0]	0:TWSI 1:MDIO
RXCTL	0:MII 1:RGMII

CONFIG	BIT 1.0	Value
VSS	00	PHYAD[0]=0 VDDO_LEVEL=3.3V
LED[0]	01	PHYAD[0]=1 VDDO_LEVEL=3.3V
LED[1]	10	PHYAD[0]=0 VDDO_LEVEL=2.5V
VDDO	11	PHYAD[0]=1 VDDO_LEVEL=2.5V

Horizon Robotics

CONFIDENTIAL

NAME: 07_Ports_Ethernet	VERSION: V1.0
PROJECT: J5_DVB	
DESIGNER: Horizon Robotics	
DRAWING DATE: 20210128	
PAGE: 13 of 69	

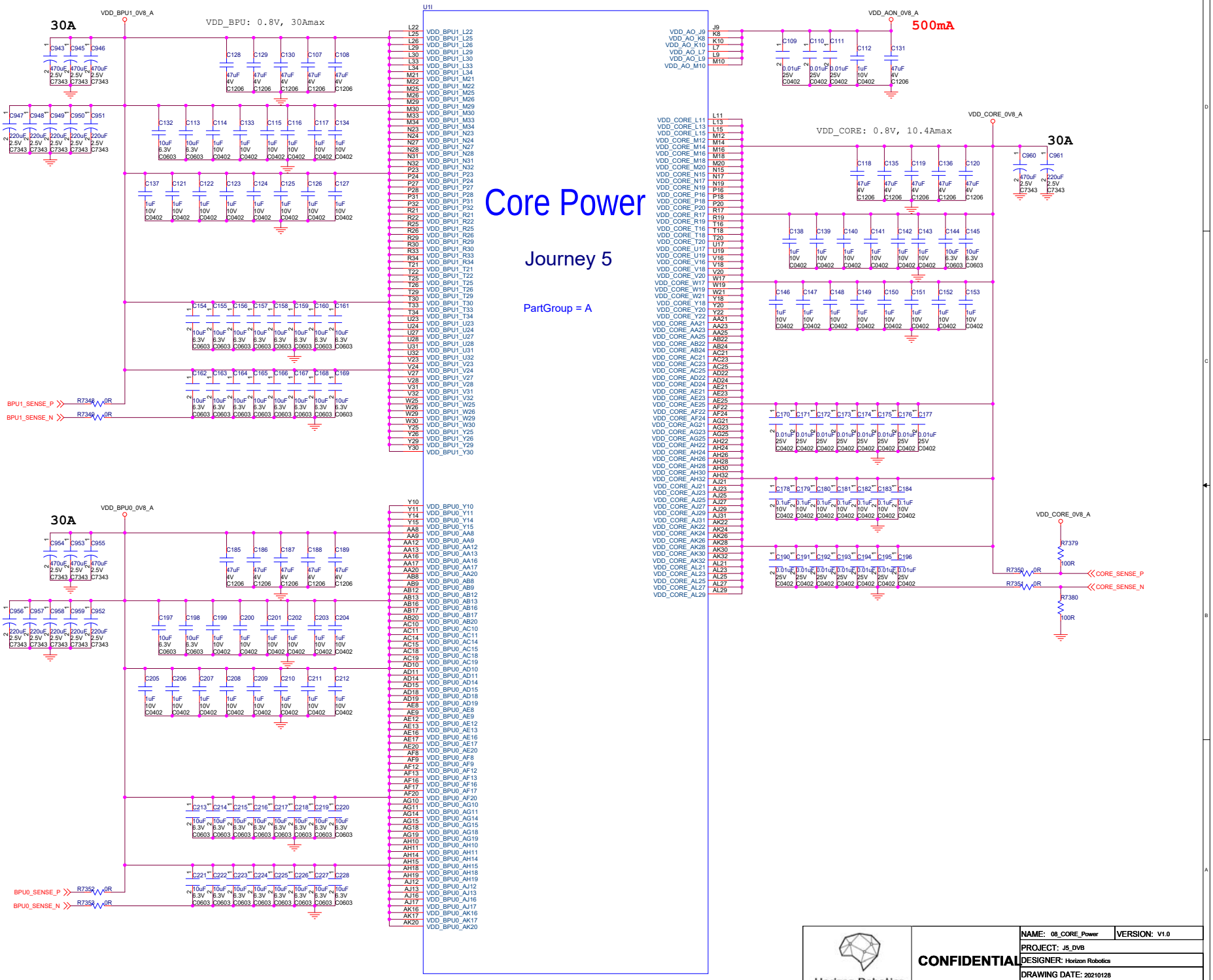
Core Power
Journey 5
PartGroup = A
VDD_BPU: 0.8V, 30Amax
VDD_CORE: 0.8V, 10.4Amax
500mA
30A
CONFIDENTIAL
Horizon Robotics
NAME: 08_CORE_Power
VERSION: V1.0
PROJECT: J5_DVB
DESIGNER: Horizon Robotics
DRAWING DATE: 20210128
PAGE: 14 of 69

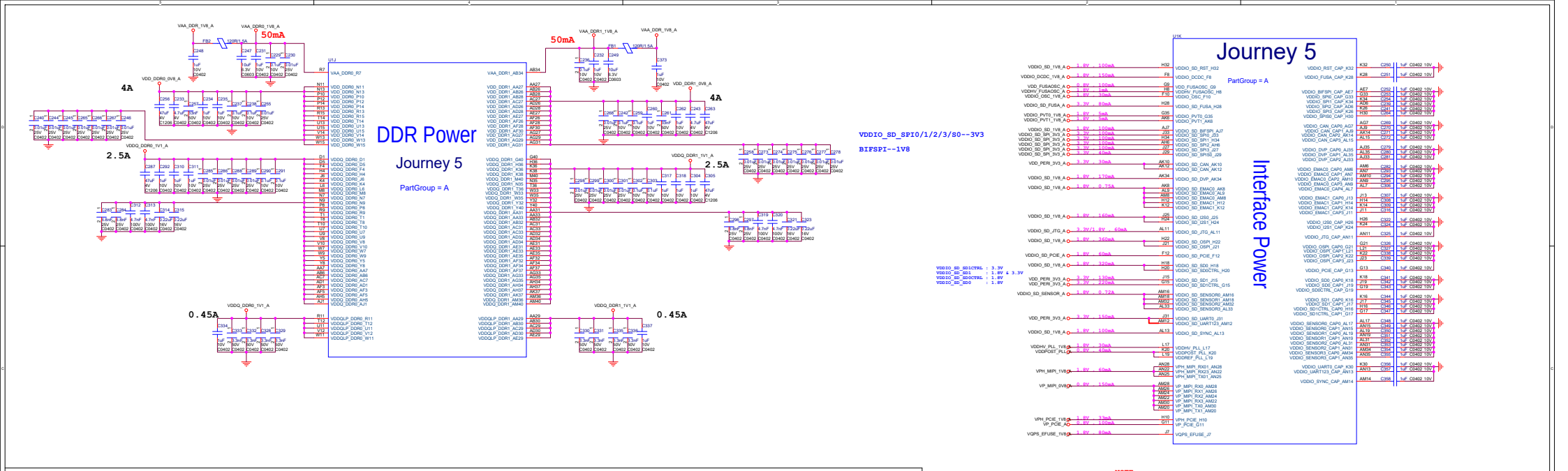

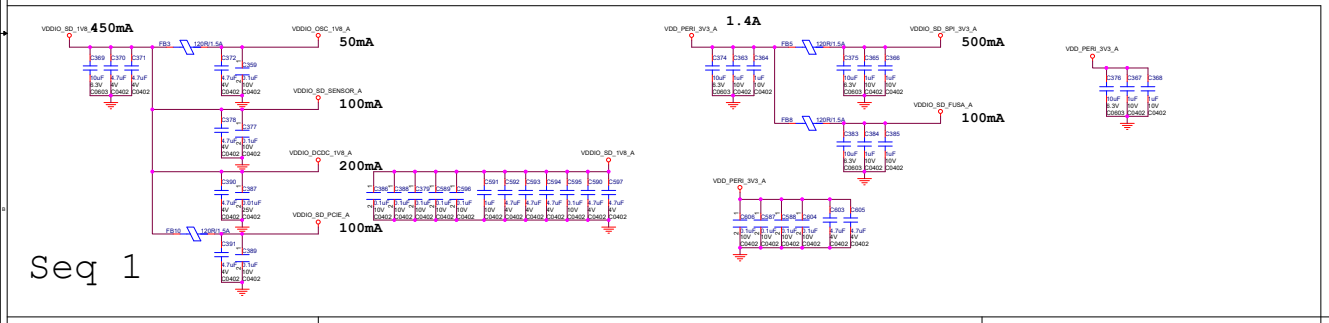

NOTE:
(1) vddio_sd_sd10/11: i/f with SD Card, need switch 3v/1.8v
(2) vddio_sd_sd12/13: SD slot is 3v supply, so connect to 3V.
BUT, vddio_sd_sd13 also supply to sd0 controller io,
sd0 i/f with emmc 1.8V, so vddio_sd_sd12/13 = ???

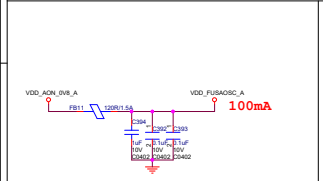

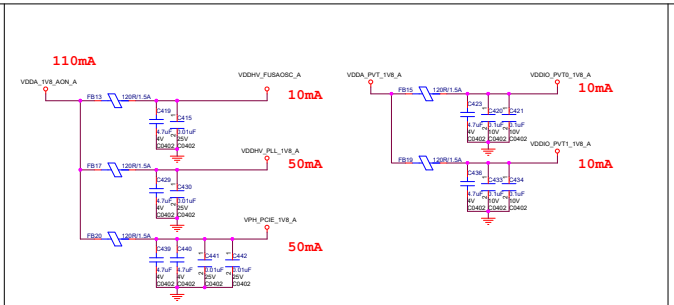

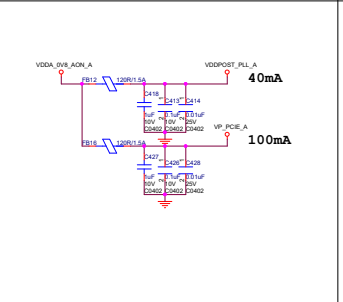

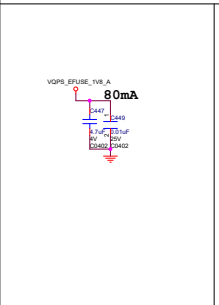

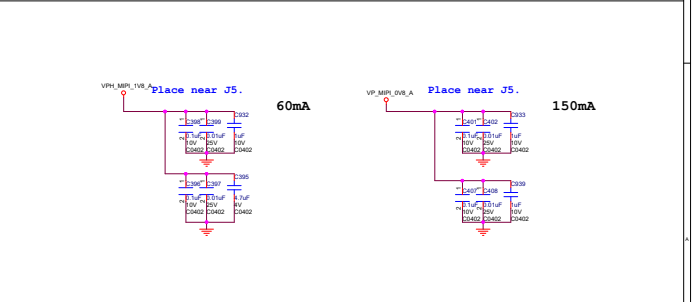

Horizon Robotics

CONFIDENTIAL

NAME: 09_PERI_Power	VERSION: V1.0
PROJECT: J5_EVB	
DESIGNER: Horizon Robotics	
DRAWING DATE: 20210128	
PAGE: 15 of 89	

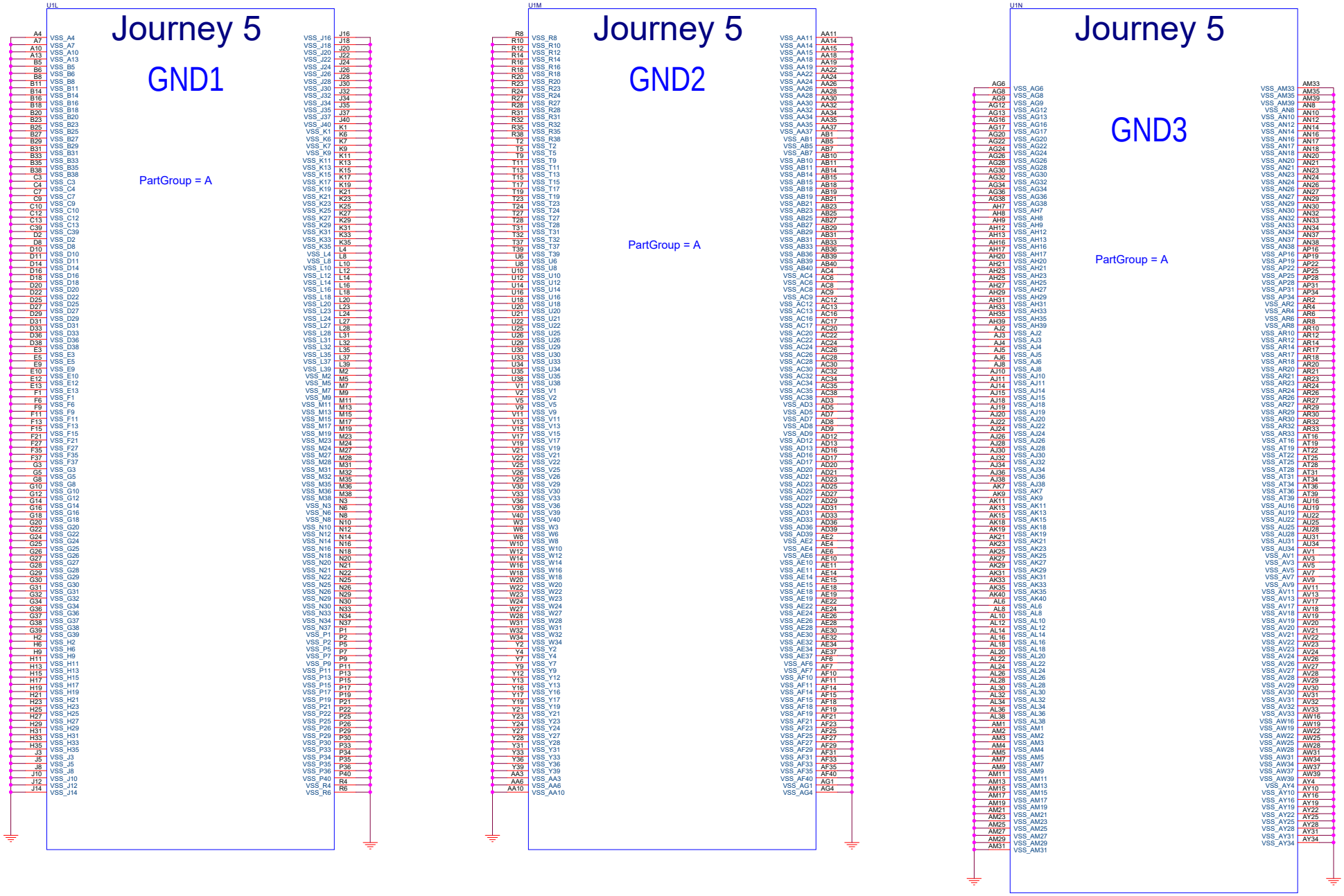

Horizon Robotics	CONFIDENTIAL	NAME: 10_Ground	VERSION: V1.0
		PROJECT: J5_DVB	
		DESIGNER: Horizon Robotics	
		DRAWING DATE: 20210128	
		PAGE: 16 of 69	

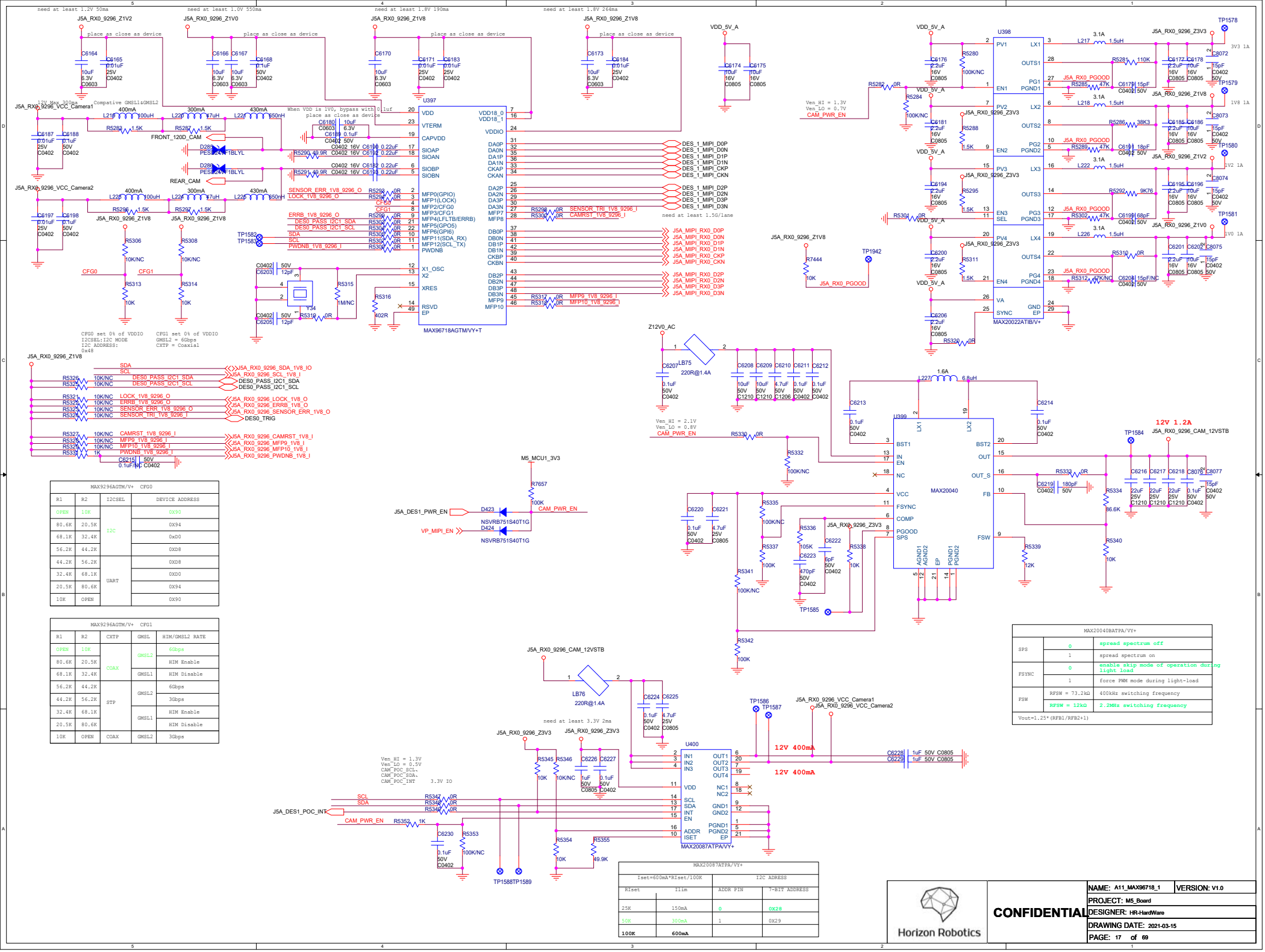

MAX9296AGTM/V+ CFG0			
R1	R2	I2CSEL	DEVICE ADDRESS
OPEN	10K	I2C	0X90
80.6K	20.5K		0X94
68.1K	32.4K		0XD0
56.2K	44.2K		0XD8
44.2K	56.2K	UART	0XD8
32.4K	68.1K		0XD0
20.5K	80.6K		0X94
10K	OPEN		0X90

MAX9296AGTM/V+ CFG1				
R1	R2	CXTP	GMSL	HIM/GMSL2 RATE
OPEN	10K	COAX	GMSL2	6Gbps
80.6K	20.5K			HIM Enable
68.1K	32.4K		GMSL1	HIM Disable
56.2K	44.2K	STP	GMSL2	6Gbps
44.2K	56.2K			3Gbps
32.4K	68.1K		GMSL1	HIM Enable
20.5K	80.6K			HIM Disable
10K	OPEN	COAX	GMSL2	3Gbps

MAX20040BATPA/VY+		
SPS	0	spread spectrum off
	1	spread spectrum on
FSYNC	0	enable skip mode of operation during light load
	1	force PWM mode during light-load
FSW	RFSW = 73.2kΩ	400kHz switching frequency
	RFSW = 12kΩ	2.2MHz switching frequency
Vout=1.25*(RFB1/RFB2+1)		

MAX20087ATPA/VY+			
Iset=600mA*RIset/100K		I2C ADRESS	
RIset	Ilim	ADDR PIN	7-BIT ADDRESS
25K	150mA	0	0X28
50K	300mA	1	0X29
100K	600mA		

CONFIDENTIAL

Horizon Robotics

NAME: A11_MAX96718_1	VERSION: V1.0
PROJECT: M5_Board	
DESIGNER: HR-HardWare	
DRAWING DATE: 2021-03-15	
PAGE: 17 of 69	

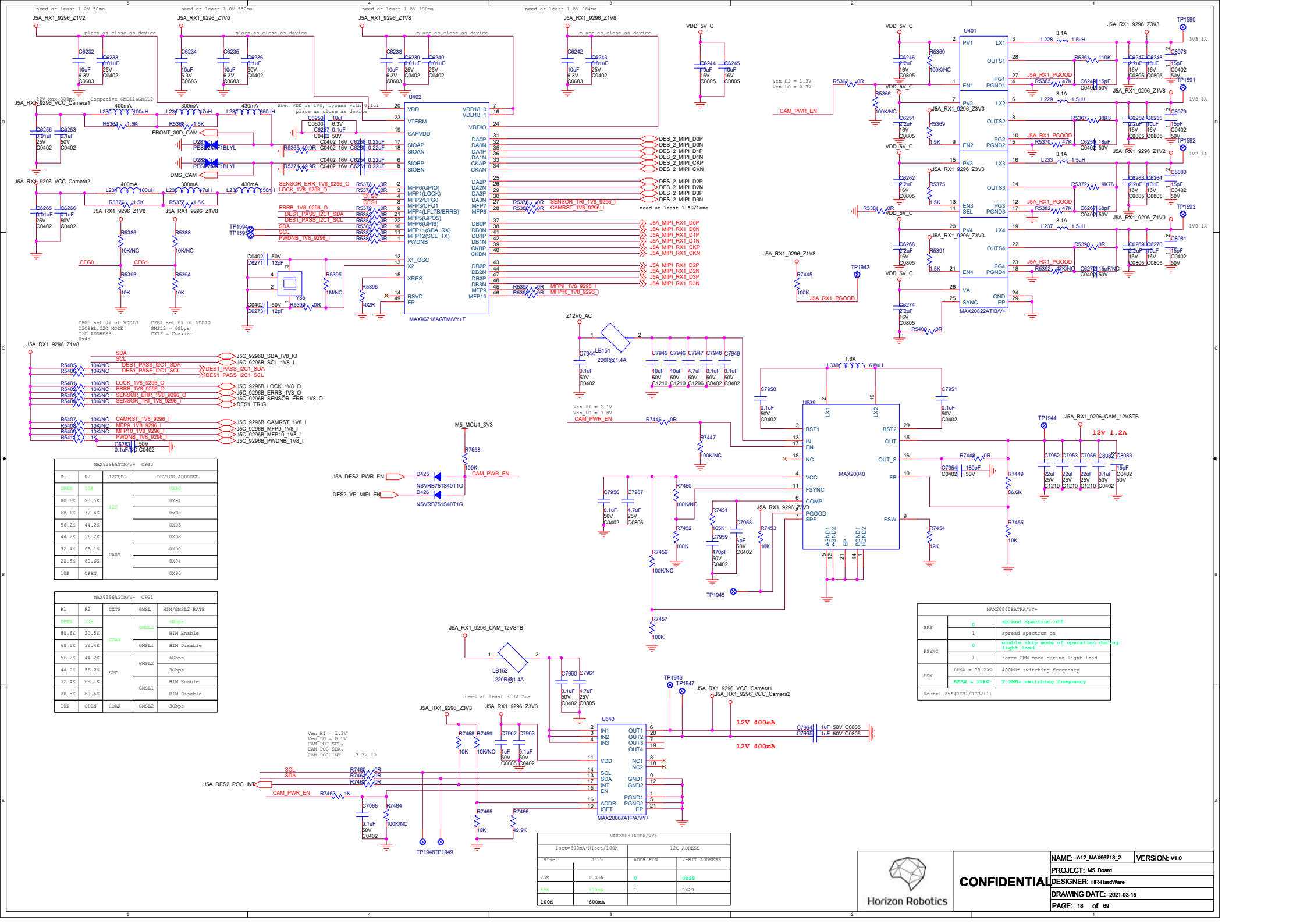
need at least 1.2V 50ma
need at least 1.0V 550ma
need at least 1.8V 190ma
need at least 1.8V 264ma
place as close as device
J5A_RX1_9296_Z1V2
J5A_RX1_9296_Z1V0
J5A_RX1_9296_Z1V8
VDD_5V_C
J5A_RX1_9296_Z3V3
TP1590
TP1591
TP1592
TP1593
TP1594
TP1595
TP1943
TP1944
TP1945
TP1946
TP1947
TP1948TP1949
U401
MAX20022ATIB/V+
U402
MAX96718AGTM/VY+T
U539
MAX20040
U540
MAX20087ATPA/VY+
LB151
220R@1.4A
LB152
220R@1.4A
L330
1.6A
6.8uH
J5A_RX1_9296_VCC_Camera1
J5A_RX1_9296_VCC_Camera2
J5A_RX1_9296_CAM_12VSTB
12V 1.2A
12V 400mA
FRONT_30D_CAM
DMS_CAM
CAM_PWR_EN
J5A_DES2_PWR_EN
DES2_VP_MIPI_EN
J5A_DES2_POC_INT
M5_MCU1_3V3
Z12V0_AC
DES_2_MIPI_D0P
DES_2_MIPI_D0N
DES_2_MIPI_D1P
DES_2_MIPI_D1N
DES_2_MIPI_CKP
DES_2_MIPI_CKN
DES_2_MIPI_D2P
DES_2_MIPI_D2N
DES_2_MIPI_D3P
DES_2_MIPI_D3N
J5A_MIPI_RX1_D0P
J5A_MIPI_RX1_D0N
J5A_MIPI_RX1_D1P
J5A_MIPI_RX1_D1N
J5A_MIPI_RX1_CKP
J5A_MIPI_RX1_CKN
J5A_MIPI_RX1_D2P
J5A_MIPI_RX1_D2N
J5A_MIPI_RX1_D3P
J5A_MIPI_RX1_D3N
J5C_9296B_SDA_IV8_IO
J5C_9296B_SCL_1V8_I
J5C_9296B_LOCK_1V8_O
J5C_9296B_ERRB_1V8_O
J5C_9296B_SENSOR_ERR_1V8_O
DES1_TRIG
J5C_9296B_CAMRST_1V8_I
J5C_9296B_MFP9_1V8_I
J5C_9296B_MFP10_1V8_I
J5C_9296B_PWDNB_1V8_I
CFG0 set 0% of VDDIO
I2CSEL:I2C MODE
I2C ADDRESS:
0x48
CFG1 set 0% of VDDIO
GMSL2 = 6Gbps
CXTP = Coaxial
MAX9296AGTM/V+ CFG0
R1 R2 I2CSEL DEVICE ADDRESS
OPEN 10K I2C 0X90
80.6K 20.5K I2C 0X94
68.1K 32.4K I2C 0xD0
56.2K 44.2K I2C 0XD8
44.2K 56.2K UART 0XD8
32.4K 68.1K UART 0XD0
20.5K 80.6K UART 0X94
10K OPEN UART 0X90
MAX9296AGTM/V+ CFG1
R1 R2 CXTP GMSL HIM/GMSL2 RATE
OPEN 10K COAX GMSL2 6Gbps
80.6K 20.5K COAX GMSL2 HIM Enable
68.1K 32.4K COAX GMSL1 HIM Disable
56.2K 44.2K STP GMSL2 6Gbps
44.2K 56.2K STP GMSL2 3Gbps
32.4K 68.1K STP GMSL1 HIM Enable
20.5K 80.6K STP GMSL1 HIM Disable
10K OPEN COAX GMSL2 3Gbps
MAX20040BATPA/VY+
SPS 0 spread spectrum off
1 spread spectrum on
FSYNC 0 enable skip mode of operation during light load
1 force PWM mode during light-load
FSW RFSW = 73.2kΩ 400kHz switching frequency
RFSW = 12kΩ 2.2MHz switching frequency
Vout=1.25*(RFB1/RFB2+1)
MAX20087ATPA/VY+
Iset=600mA*RIset/100K
I2C ADRESS
RIset Ilim ADDR PIN 7-BIT ADDRESS
25K 150mA 0 0X28
50K 300mA 1 0X29
100K 600mA
CONFIDENTIAL
Horizon Robotics
NAME: A12_MAX96718_2
VERSION: V1.0
PROJECT: M5_Board
DESIGNER: HR-HardWare
DRAWING DATE: 2021-03-15
PAGE: 18 of 69

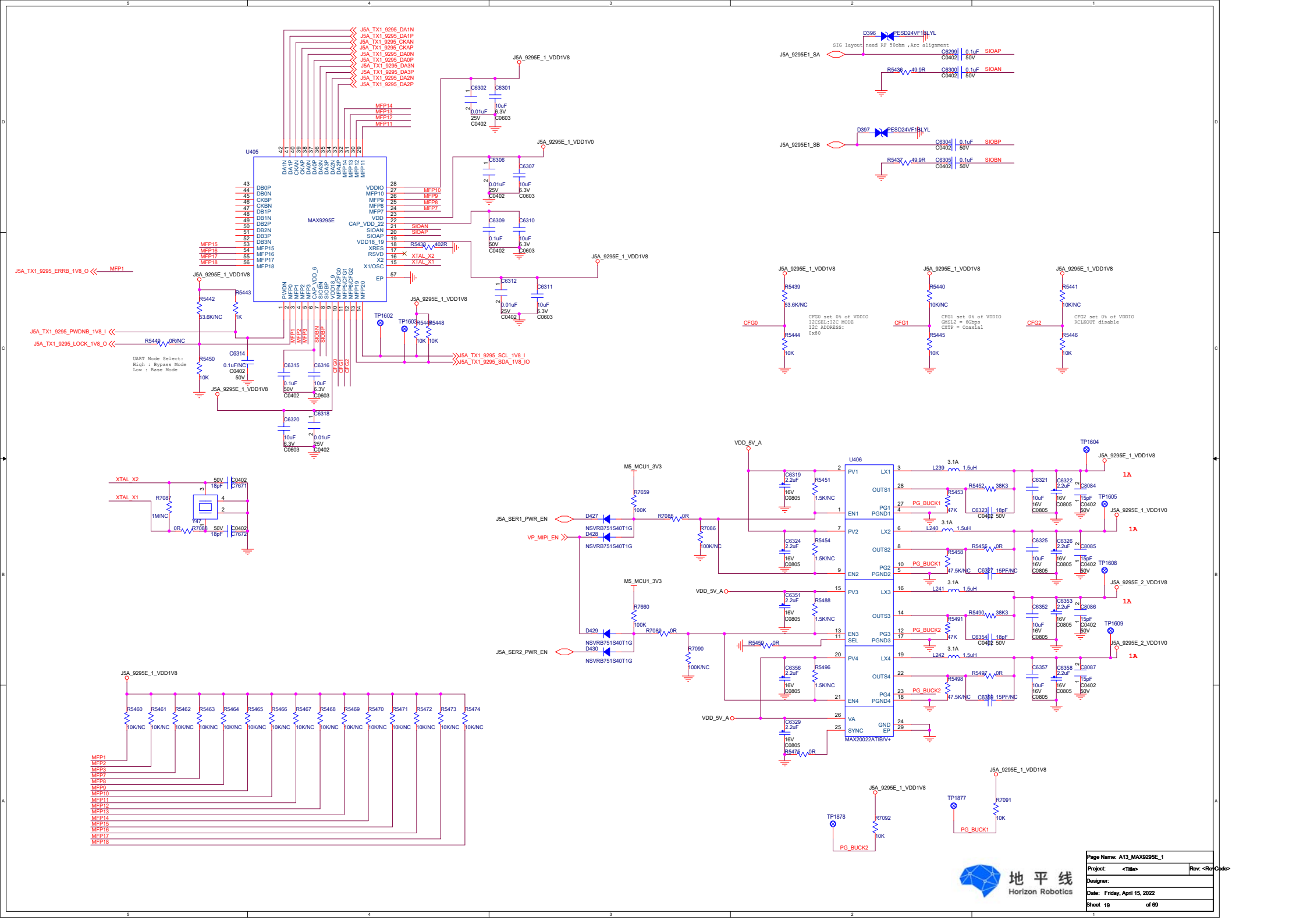
U405
MAX9295E
J5A_TX1_9295_DA1N
J5A_TX1_9295_DA1P
J5A_TX1_9295_CKAN
J5A_TX1_9295_CKAP
J5A_TX1_9295_DA0N
J5A_TX1_9295_DA0P
J5A_TX1_9295_DA3N
J5A_TX1_9295_DA3P
J5A_TX1_9295_DA2N
J5A_TX1_9295_DA2P
J5A_9295E_1_VDD1V8
J5A_9295E_1_VDD1V0
J5A_TX1_9295_ERRB_1V8_O
J5A_TX1_9295_PWDNB_1V8_I
J5A_TX1_9295_LOCK_1V8_O
J5A_TX1_9295_SCL_1V8_I
J5A_TX1_9295_SDA_1V8_IO
UART Mode Select:
High : Bypass Mode
Low : Base Mode
J5A_9295E1_SA
J5A_9295E1_SB
D396 PESD24VF1BLYL
D397 PESD24VF1BLYL
SIG layout need RF 50ohm ,Arc alignment
SIOAP
SIOAN
SIOBP
SIOBN
CFG0
CFG1
CFG2
U406
MAX20022ATIB/V+
M5_MCU1_3V3
VDD_5V_A
J5A_SER1_PWR_EN
J5A_SER2_PWR_EN
VP_MIPI_EN
PG_BUCK1
PG_BUCK2
TP1604
TP1605
TP1608
TP1609
TP1602
TP1603
TP1877
TP1878
J5A_9295E_2_VDD1V8
J5A_9295E_2_VDD1V0
Page Name: A13_MAX9295E_1
Project: <Title>
Rev: <RevCode>
Designer:
Date: Friday, April 15, 2022
Sheet 19 of 69
地平线
Horizon Robotics

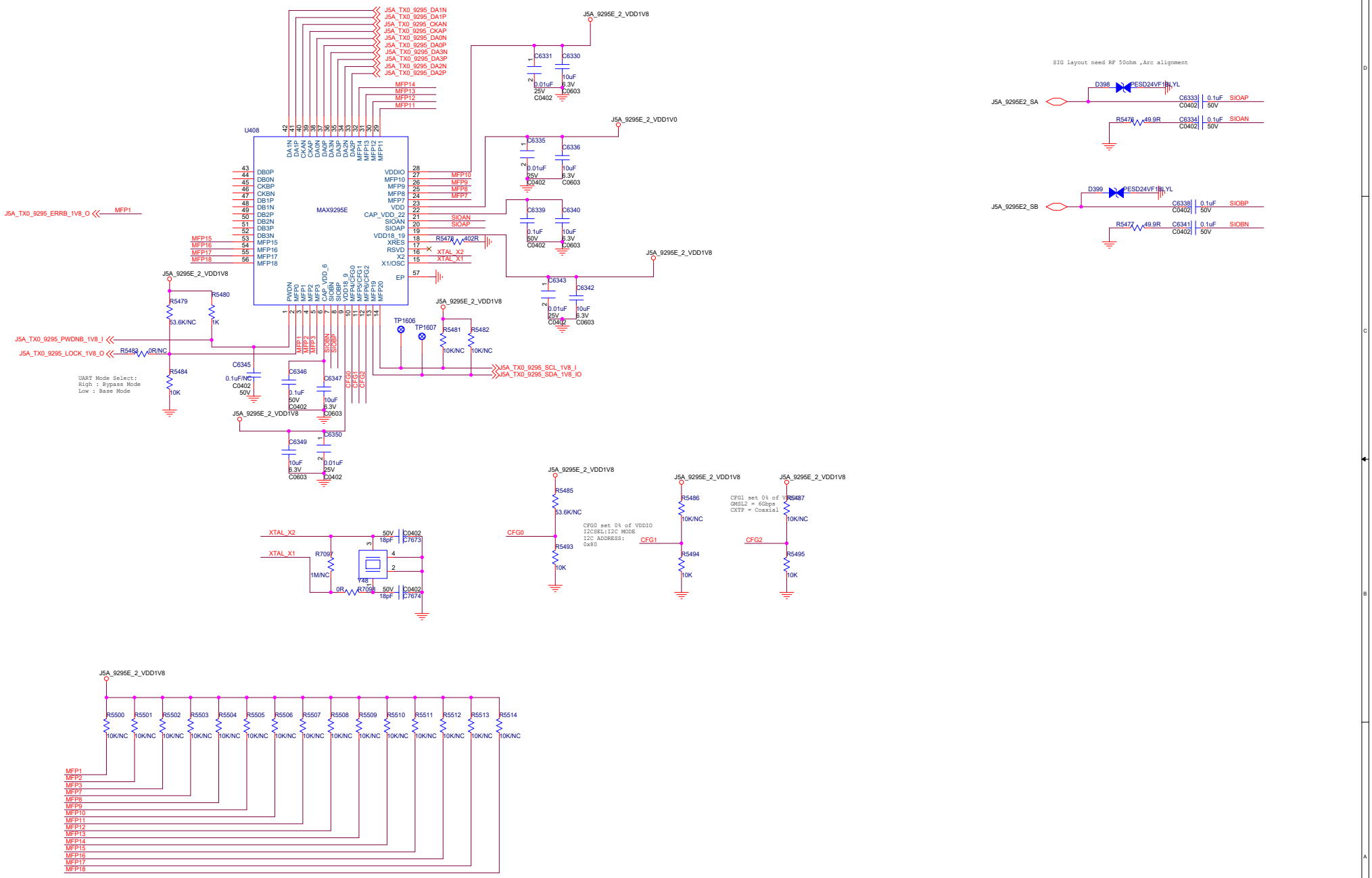

地平线
Horizon Robotics

Page Name: A14_MAX9295E_2	
Project: <Title>	Rev: <RevCode>
Designer:	
Date: Saturday, April 02, 2022	
Sheet 20 of 69	

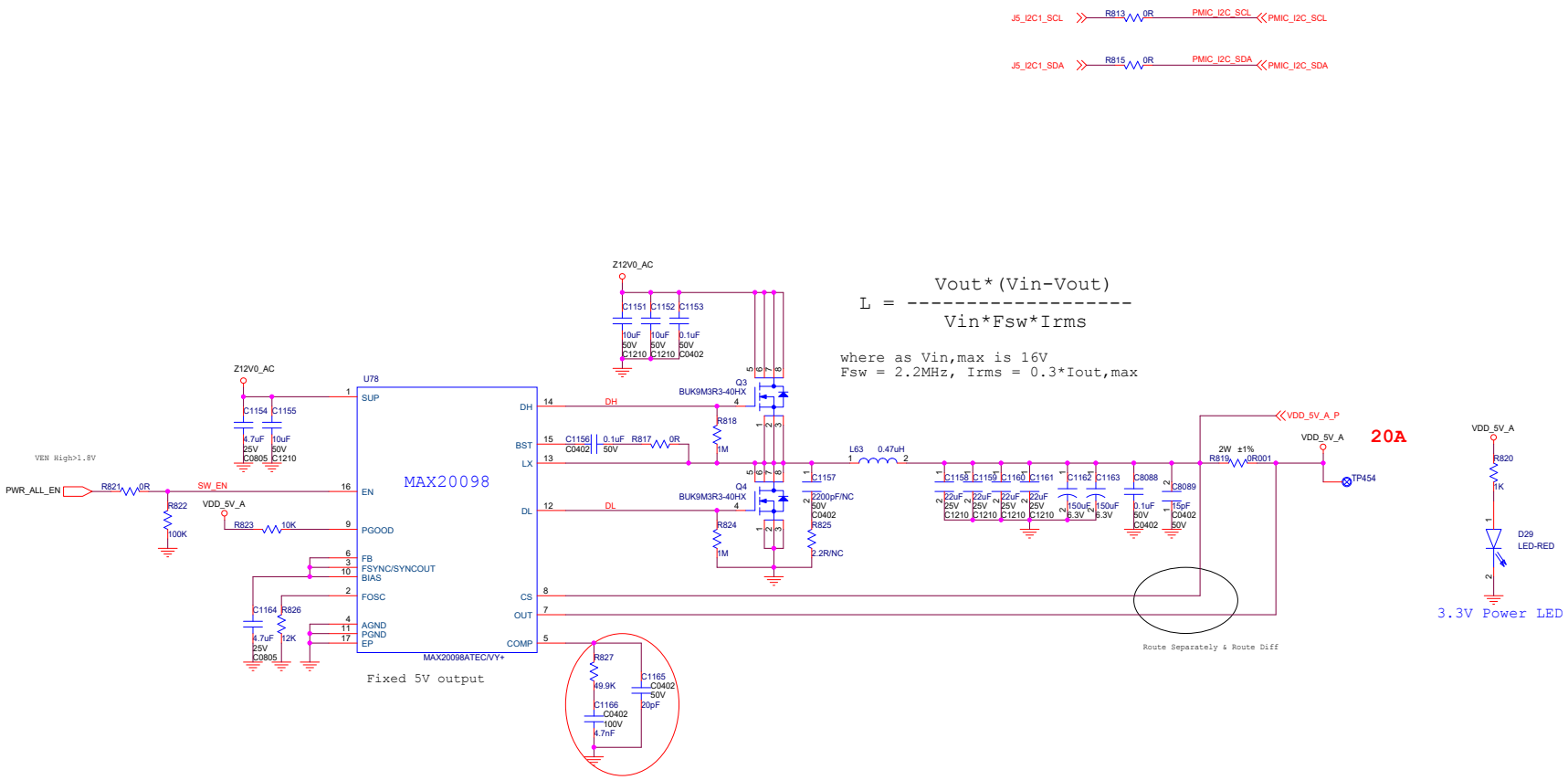

Horizon Robotics	CONFIDENTIAL	NAME: 02_Z5V0	VERSION: V1.0
		PROJECT: J5_DVB	
		DESIGNER: Horizon Robotics	
		DRAWING DATE: 20210128	
		PAGE: 22 of 69	

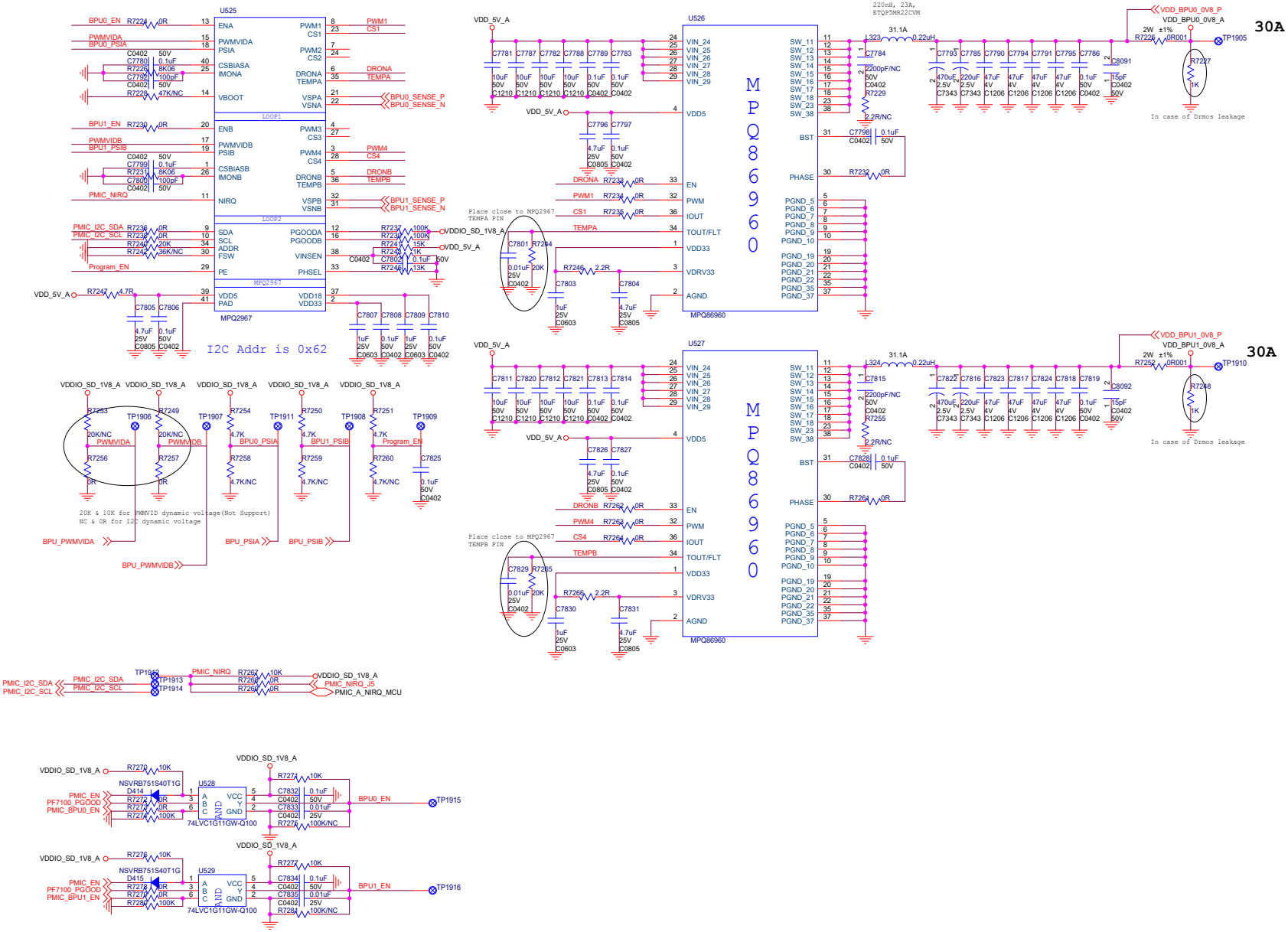

Title	<Title>		
Size C	Document Number <Doc>		Rev <RevCode>
Date: Saturday, April 02, 2022	Sheet 23 of 69		

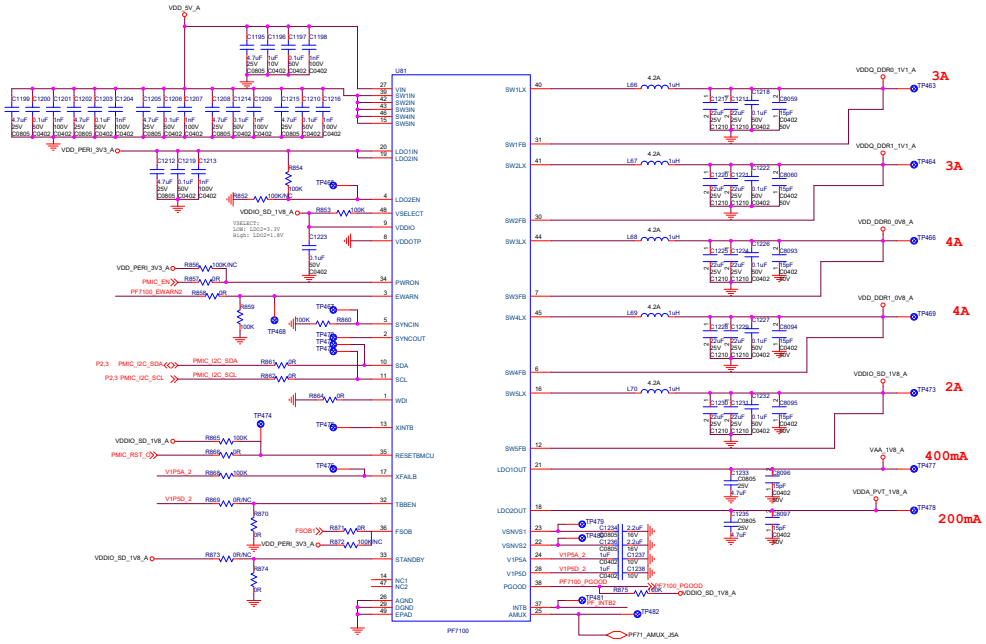

PF7100 I2C Address is set by the OTP_I2C_ADD[2:0], range from 0x08~0x0F

(1) DO NOT supply VQPS_EFUSE before PF7100_PG is High.
(2) Short TP1951 and TP1952 to supply VQPS_EFUSE.

Footprint:R0805

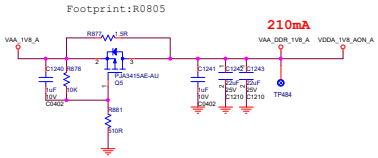

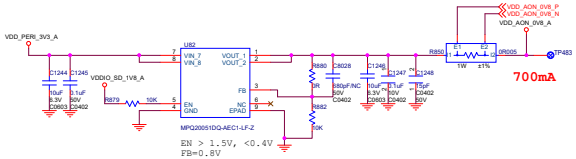

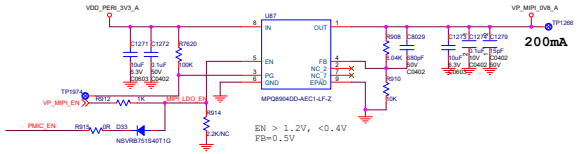

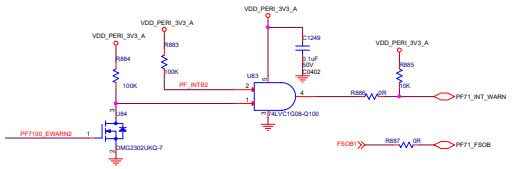

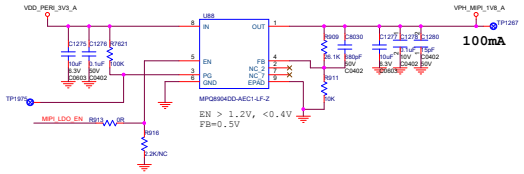

Horizon Robotics	CONFIDENTIAL
NAME: 04_PF7100	VERSION: V1.0
PROJECT: J5_DVB	
DESIGNER: Horizon Robotics	
DRAWING DATE: 20210128	
PAGE: 34 of 89	

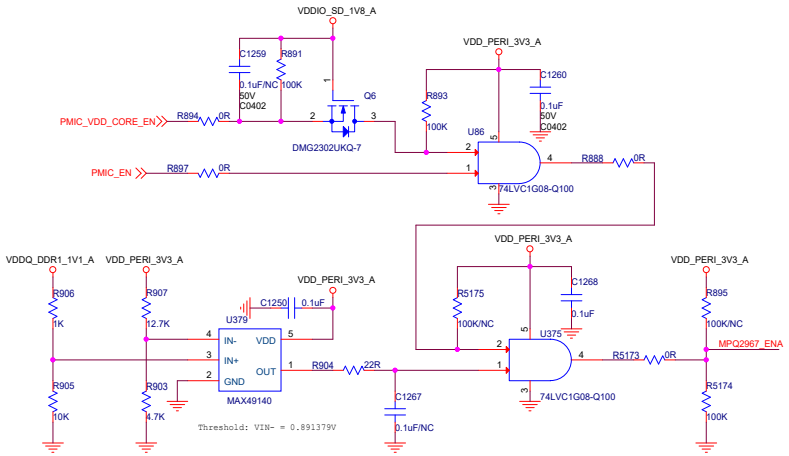

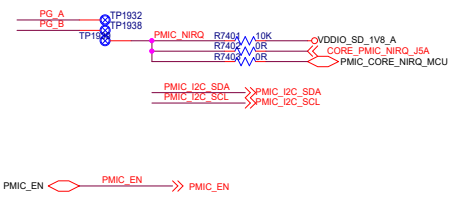

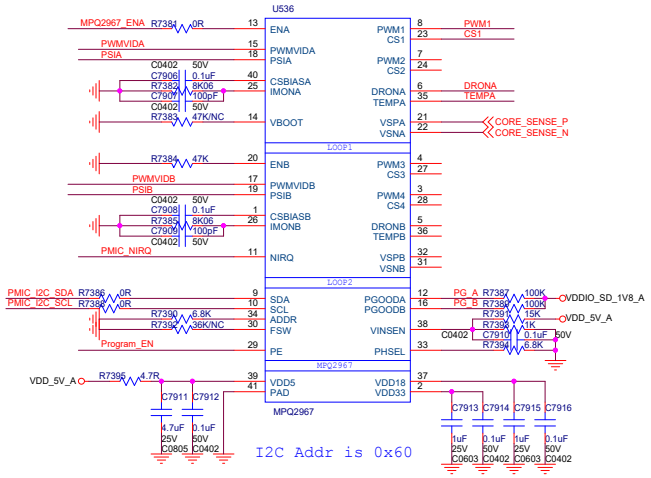

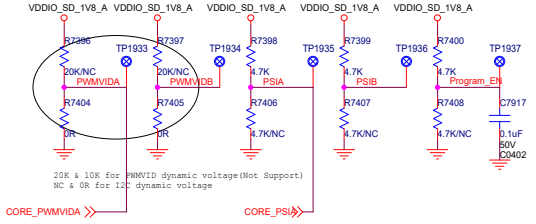

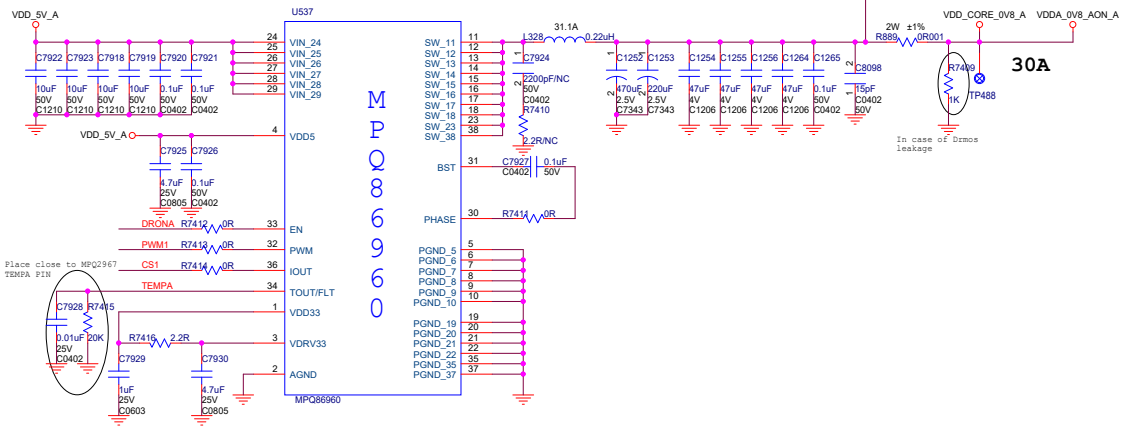

Horizon Robotics	CONFIDENTIAL	NAME: 05_PF5200&LDO VERSION: V1.0
		PROJECT: J5_DVB
		DESIGNER: Horizon Robotics
		DRAWING DATE: 20210128
		PAGE: 25 of 69

INA226 settings:
Shunt Voltage Register LSB : 2.5uV/bit
Bus Voltage Register LSB : 1.25mV/bit
Power Register LSB : 25*Current_LSB

Current_LSB = {Maximum Expected Current}/2^15
CAL = 0.00512/{Current_LSB * Rshunt}
Current_Register(04H) = {Shunt Voltage Register}*{CAL}/2048
Power = {Bus Voltage Register(02H)}*{Current_Register(04H)}/20000

(1) For Current rating up to 10A~20A level

$$Current\_LSB = \frac{10\ 000\ mA}{2^{15}} = 305.1757812\ uA/bit$$

Set Current_LSB as 1mA/bit
Rshunt = 0.001 Ohm , So

$$CAL = \frac{0.00512}{1\ mA/bit\ X\ 0.001\ Ohm} = 5120$$

(2) For Current rating up to <= 3A level

$$Current\_LSB = \frac{3\ 000\ mA}{2^{15}} = 91.55273438\ uA/bit$$

Set Current_LSB as 200uA/bit
Rshunt = 0.005 Ohm , So

$$CAL = \frac{0.00512}{200\ uA/bit\ X\ 0.005\ Ohm} = 5120$$

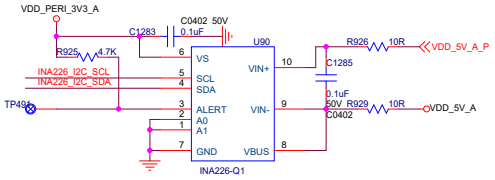

I2C Address: 100-0000 (0x40)

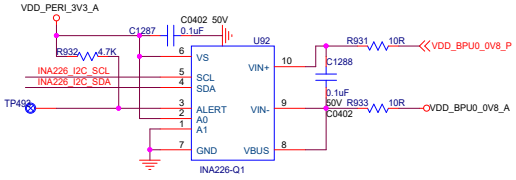

I2C Address: 100-0001 (0x41)

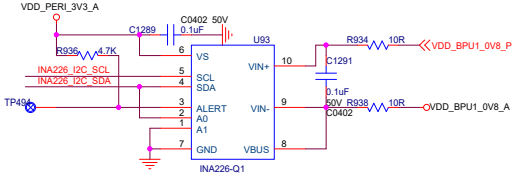

I2C Address: 100-0010 (0x42)

I2C Address: 100-0011 (0x43)

I2C Address: 100-1001 (0x44)

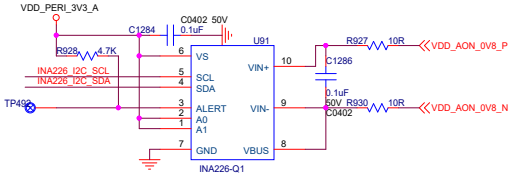

I2C Address: 100-0101 (0x45)

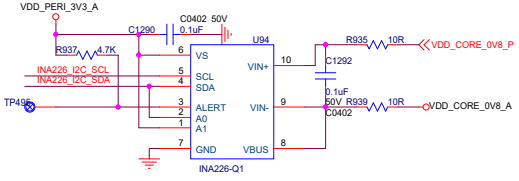

I2C Address: 100-0110 (0x46)

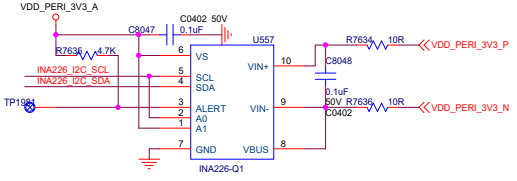

I2C Address: 100-0111 (0x47)

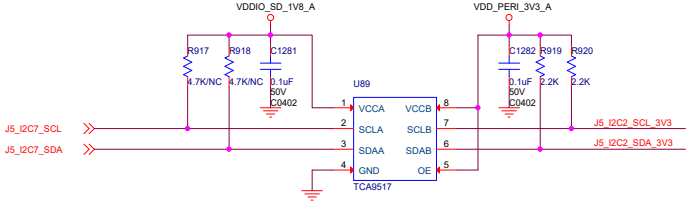

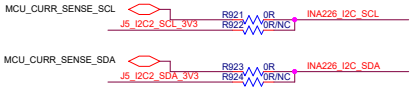

Horizon Robotics	CONFIDENTIAL	NAME: 07_Current_Sensor VERSION: V1.0
		PROJECT: J5_DVB
		DESIGNER: Horizon Robotics
		DRAWING DATE: 20210128
		PAGE: 26 of 69

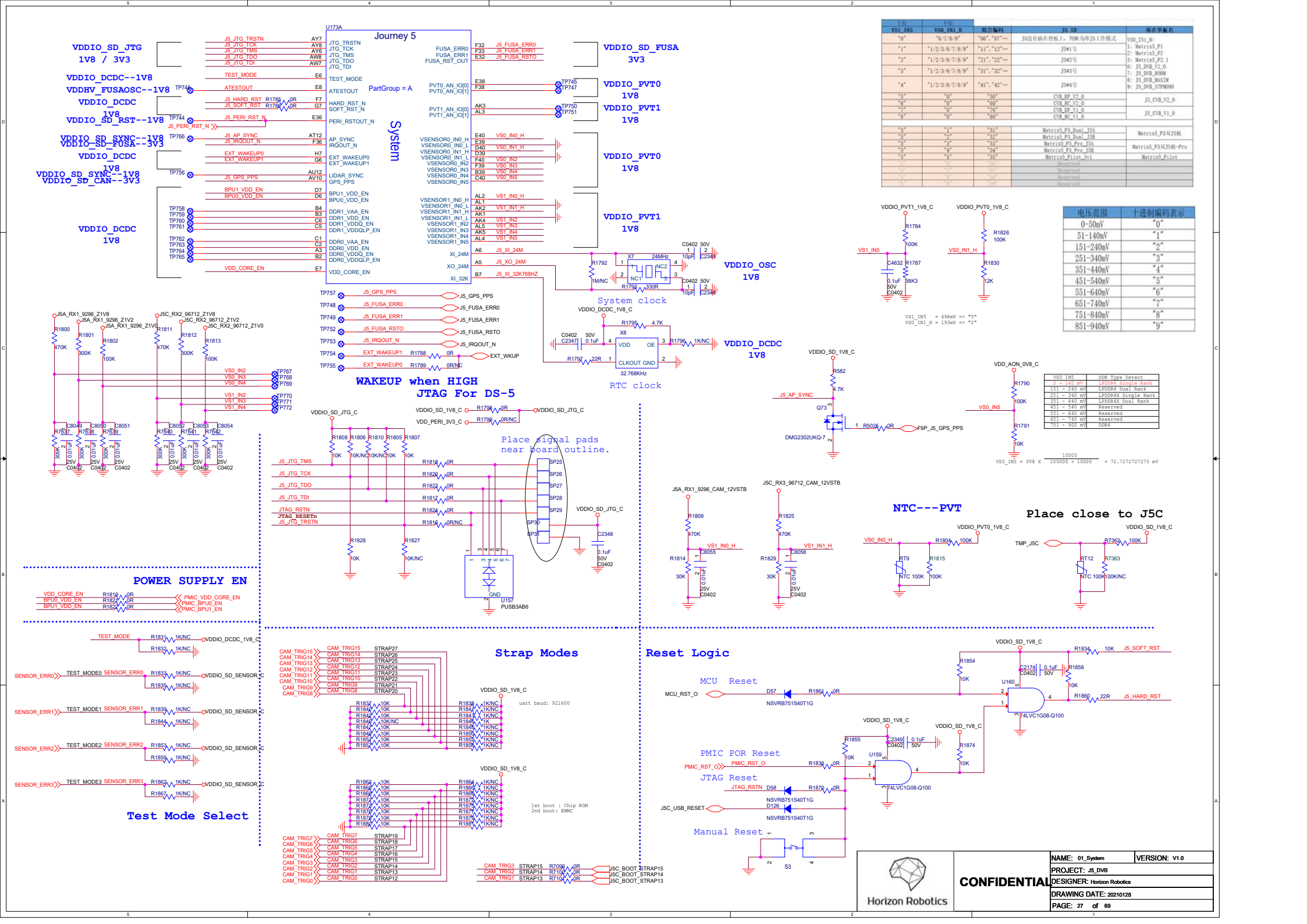

电压范围	十进制编码表示
0-50mV	"0"
51-140mV	"1"
151-240mV	"2"
251-340mV	"3"
351-440mV	"4"
451-540mV	"5"
551-640mV	"6"
651-740mV	"7"
751-840mV	"8"
851-940mV	"9"

VS0_IN5	DDR Type Detect
0 - 140 mV	LPDDR4 Single Rank
141 - 250 mV	LPDDR4 Dual Rank
251 - 340 mV	LPDDR4X Single Rank
351 - 440 mV	LPDDR4X Dual Rank
451 - 540 mV	Reserved
551 - 640 mV	Reserved
651 - 740 mV	Reserved
751 - 900 mV	DDR4

SK DDR Design guide:
(1) VDD1 : one de-cap for VDD1/VSS per about two VDD1 balls
(2) VDD2 : 100nF*3+1uF per DRAM die
(3) VDDQ : 100nF*4+4.7uF per DRAM die

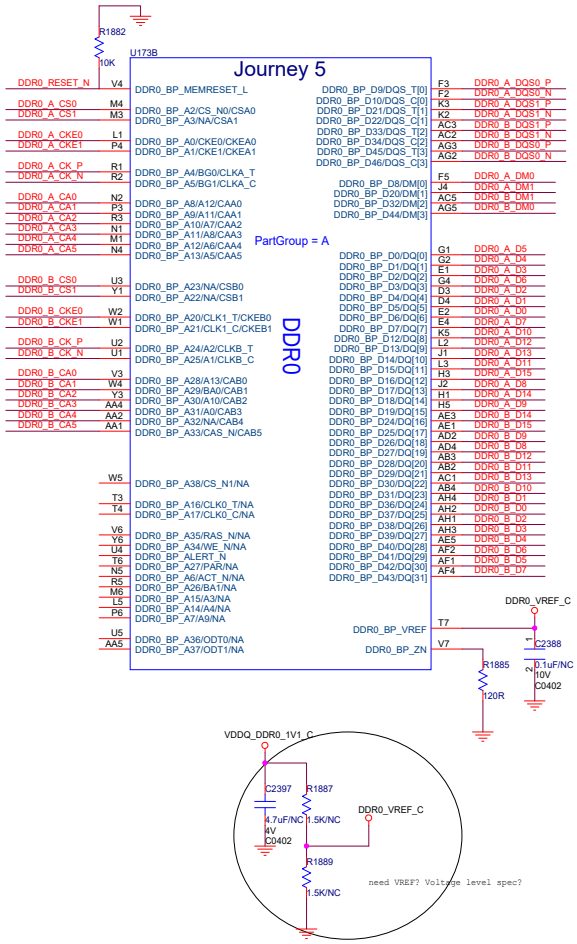

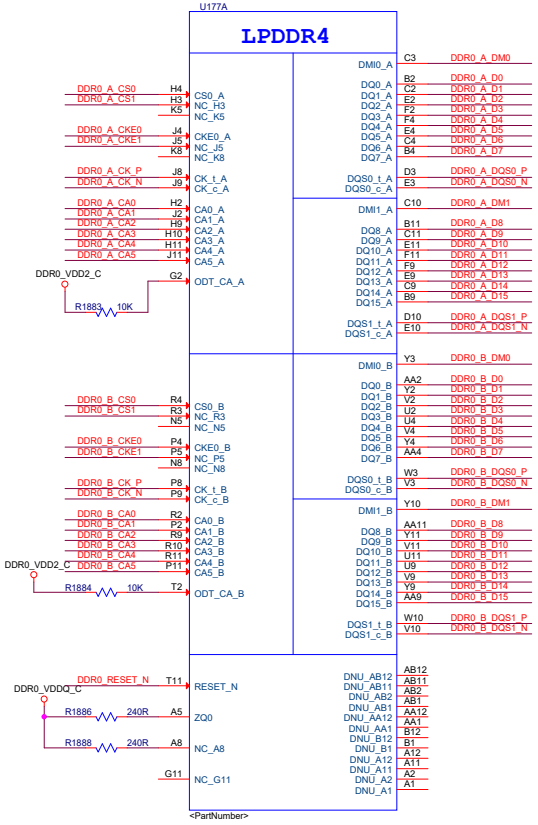

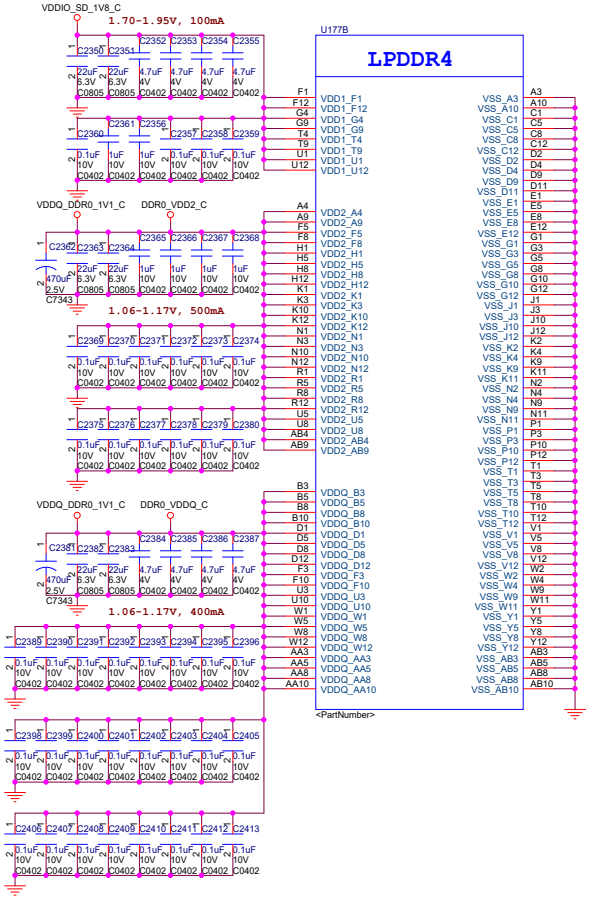

Horizon Robotics	CONFIDENTIAL	NAME: 02_DDRC0	VERSION: V1.0
		PROJECT: J5_DVB	
		DESIGNER: Horizon Robotics	
		DRAWING DATE: 20210128	
		PAGE: 28 of 69	

SK DDR Design guide:
(1) VDD1 : one de-cap for VDD1/VSS per about two VDD1 balls
(2) VDD2 : 100nF*3+1uF per DRAM die
(3) VDDQ : 100nF*4+4.7uF per DRAM die

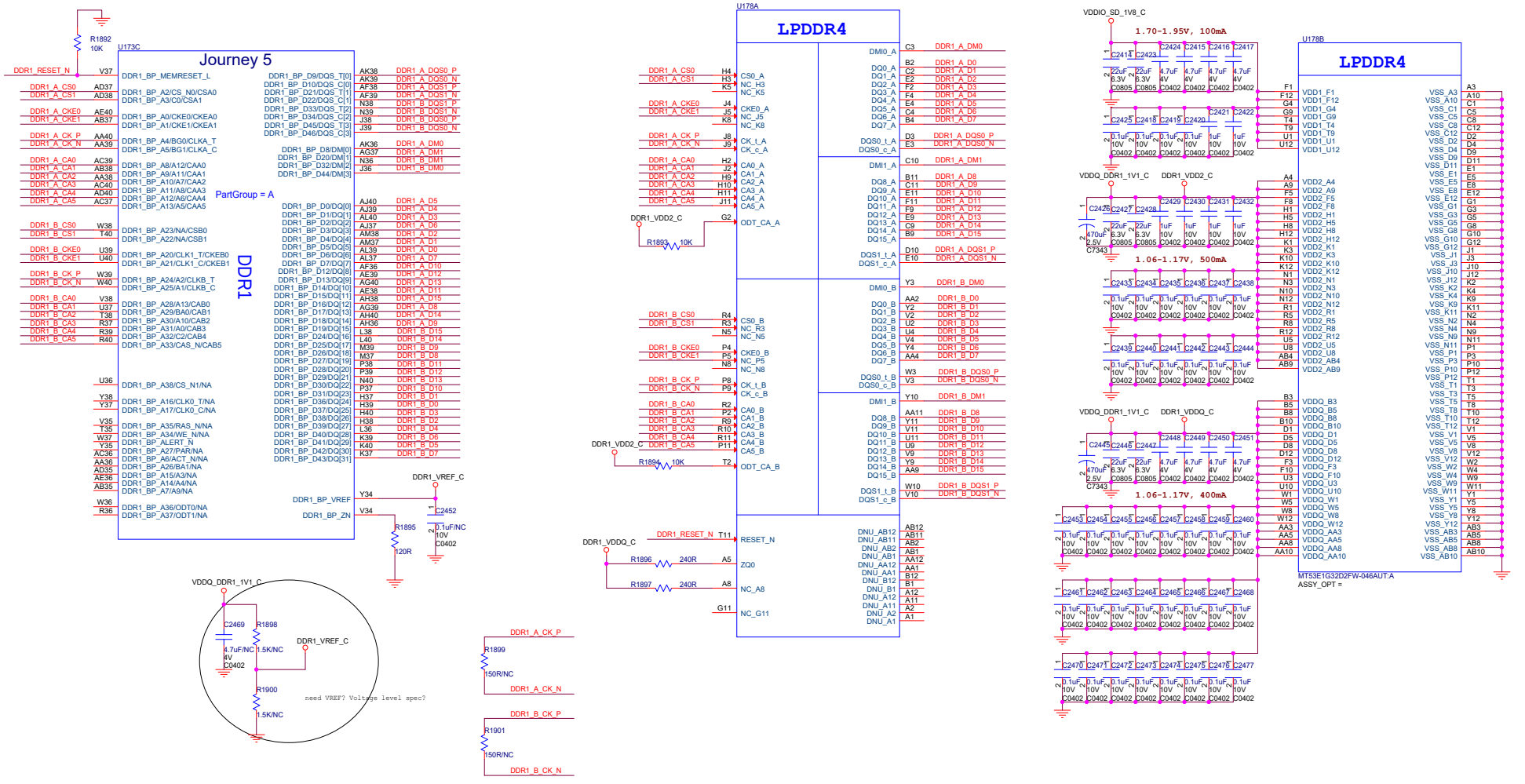

Horizon Robotics	CONFIDENTIAL	NAME: 03_DDRC1	VERSION: V1.0
		PROJECT: J5_DVB	
		DESIGNER: Horizon Robotics	
		DRAWING DATE: 20210128	
		PAGE: 29 of 69	

SD_BUS_POW: control PMIC
    1 to switch on SD socket 3.3V supply, 0 to switch off the supply.

SD_1V8: control PMIC:
    1 -> enable to change VDDIO of SoC SDIO to 1.8V,
    0-> VDDIO change back to default 3.3V.

SD_BUS_VOLT[0:2]: control PMIC,
    select voltage level for VDDIO, maybe fixed to 3.0V or 3.3V

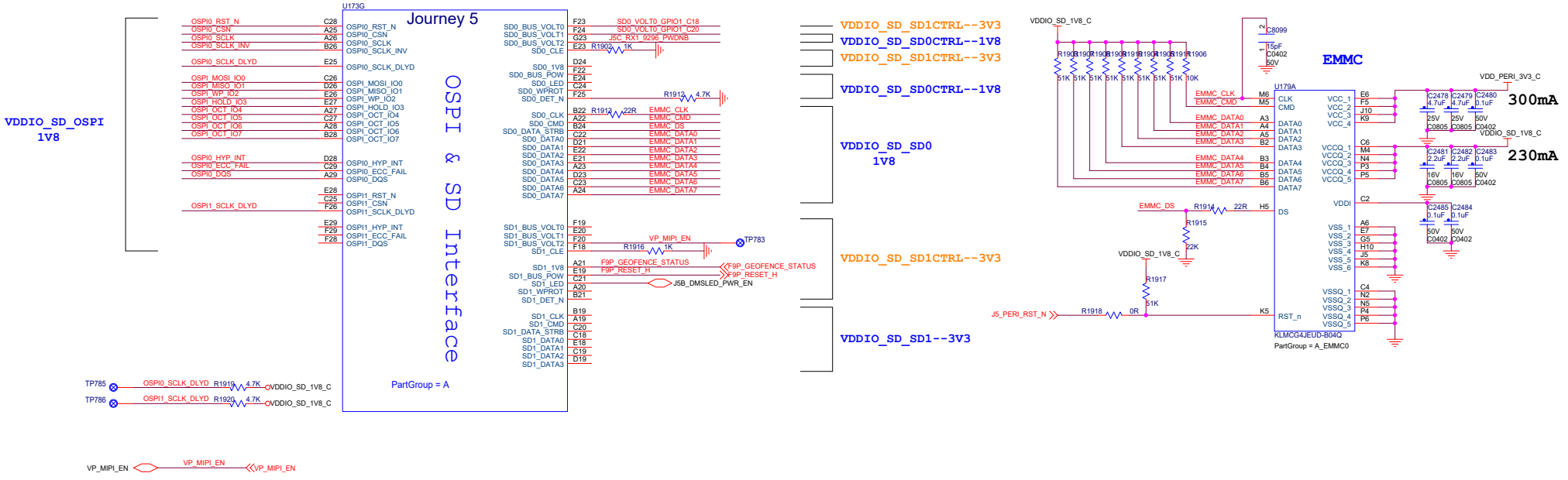

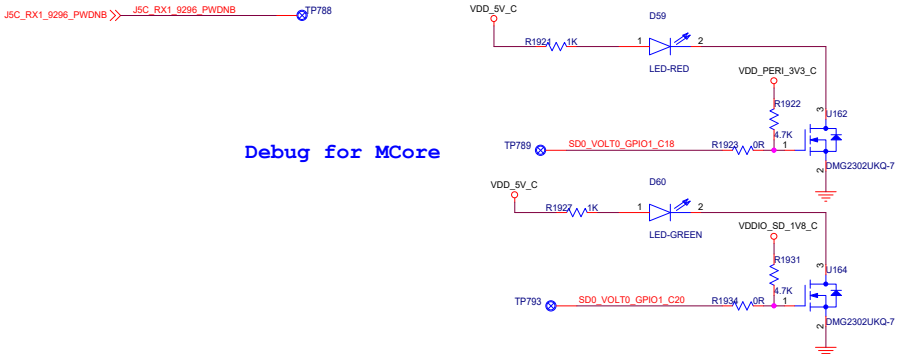

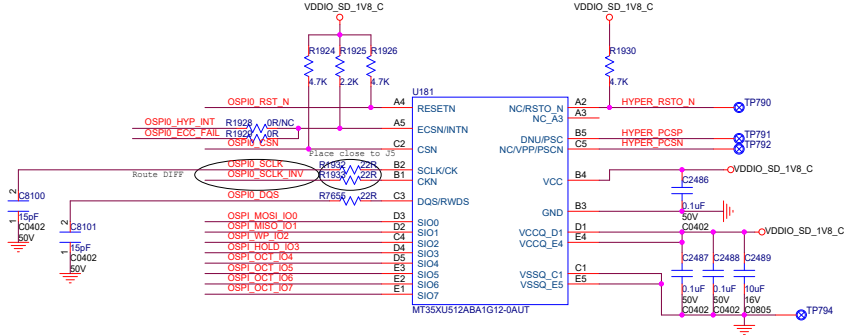

VDDIO_SD_SPI2/3/S0/BIFSPI--3V3

VDDIO_SD_SPI0/1--1V8

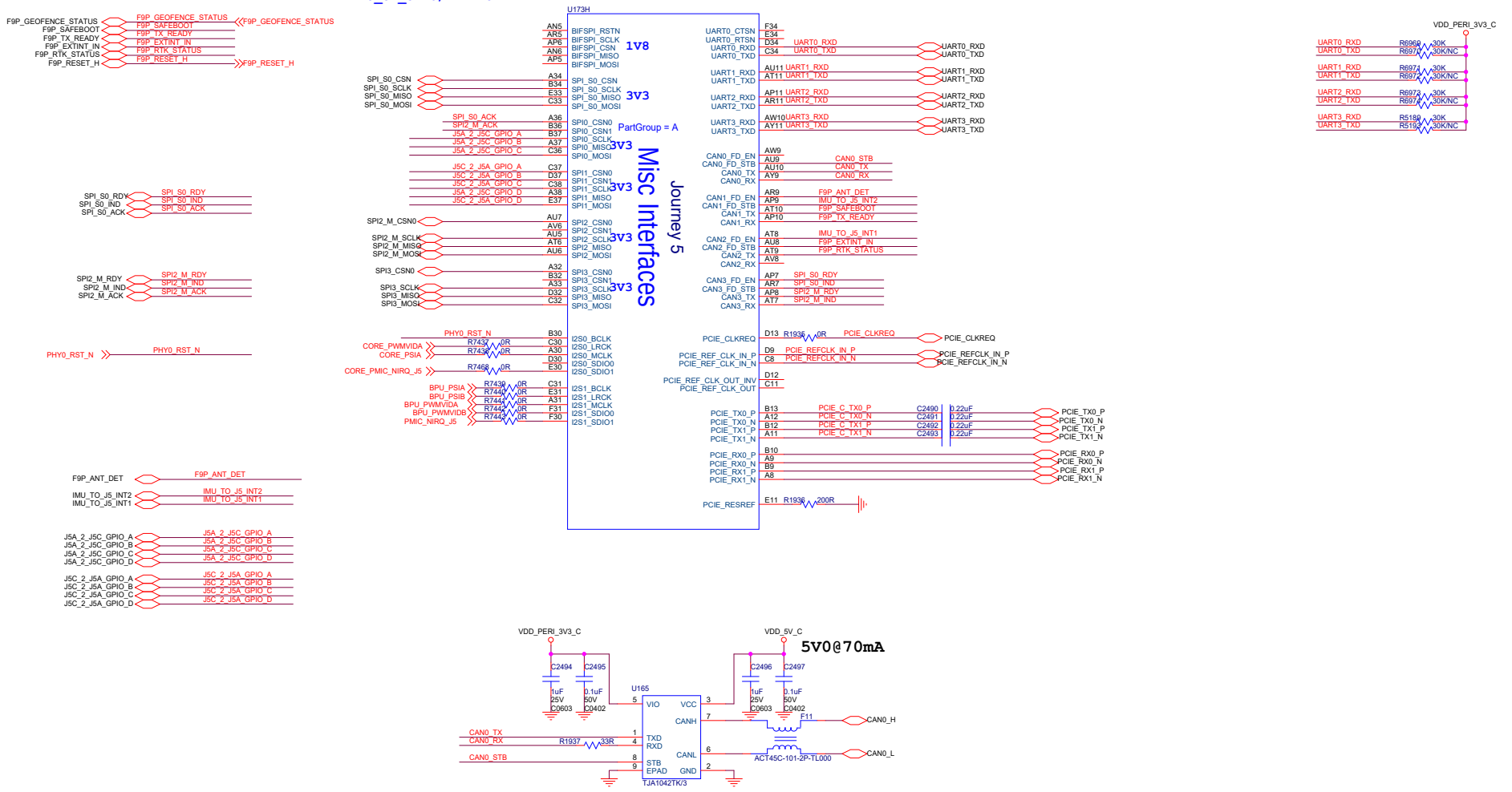

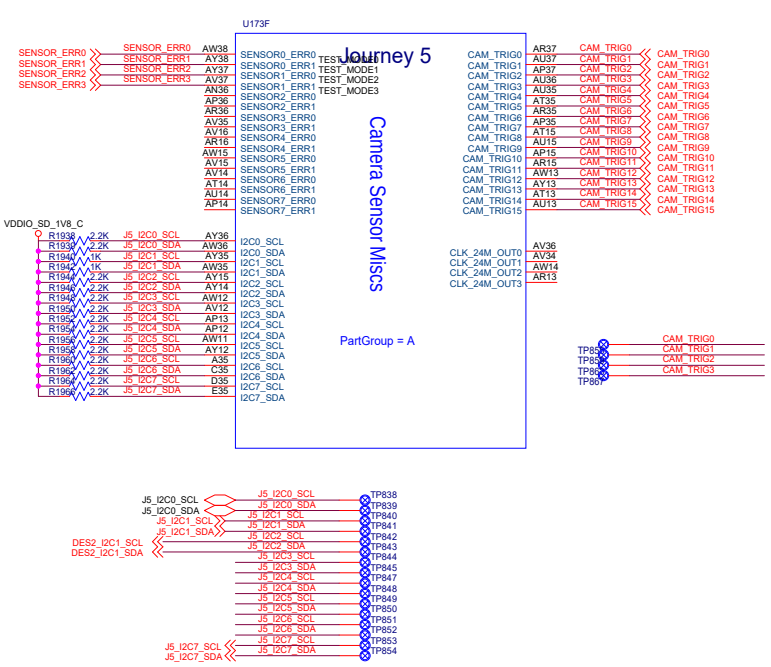

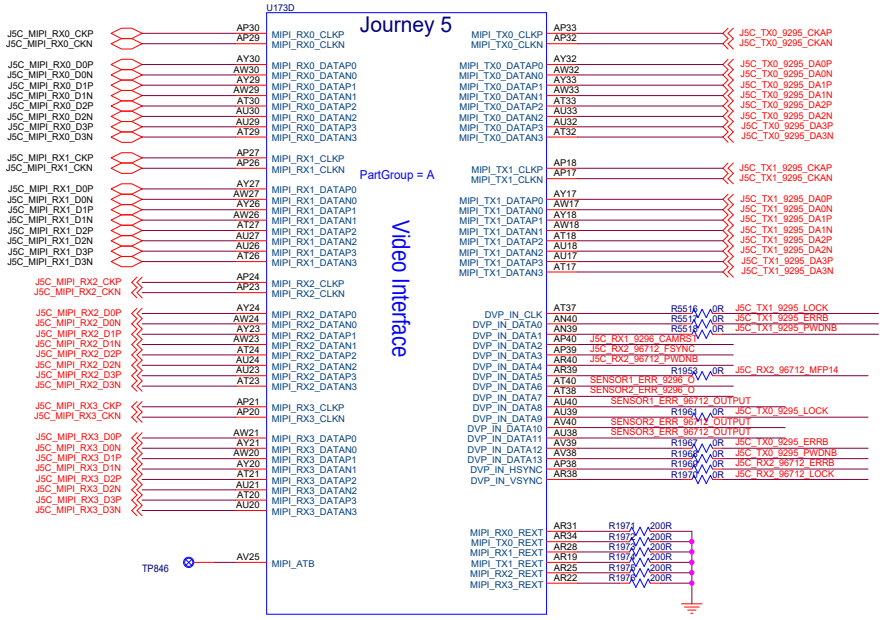

MIPI RX0

MIPI RX1

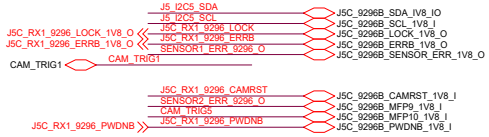

MIPI RX2

MIPI RX3

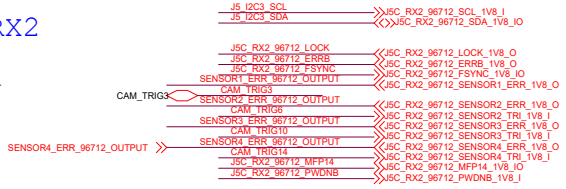

MIPI TX0

MIPI TX1

Horizon Robotics

CONFIDENTIAL

NAME: 06_Ports_MIPI_RX_TX	VERSION: V1.0
PROJECT: J5_DVB	
DESIGNER: Horizon Robotics	
DRAWING DATE: 20210128	
PAGE: 32 of 69	

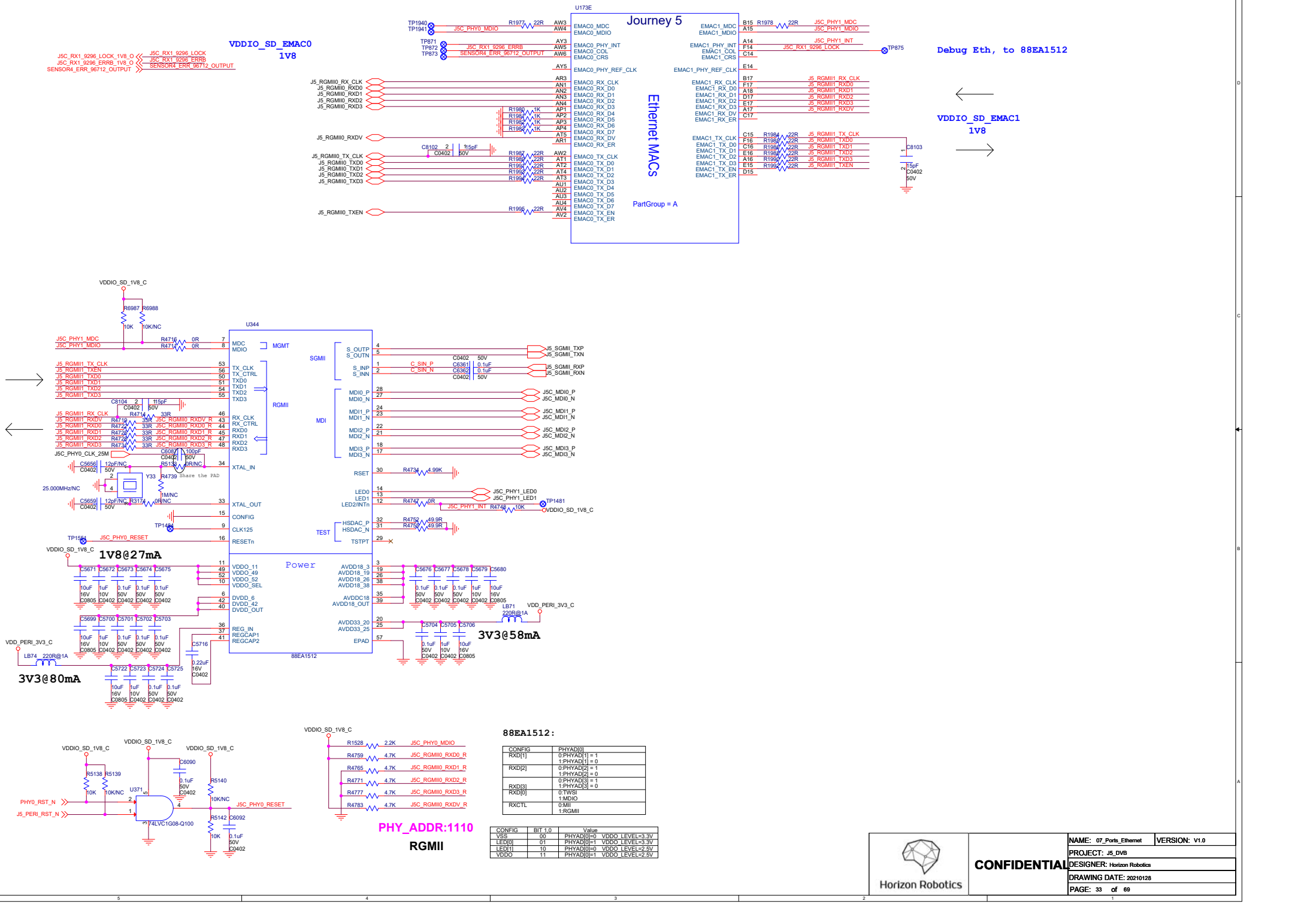

CONFIG	PHYAD[0]
RXD[1]	0:PHYAD[1] = 1 1:PHYAD[1] = 0
RXD[2]	0:PHYAD[2] = 1 1:PHYAD[2] = 0
RXD[3]	0:PHYAD[3] = 1 1:PHYAD[3] = 0
RXD[0]	0:TWSI 1:MDIO
RXCTL	0:MII 1:RGMII

CONFIG	BIT 1,0	Value
VSS	00	PHYAD[0]=0 VDDO_LEVEL=3.3V
LED[0]	01	PHYAD[0]=1 VDDO_LEVEL=3.3V
LED[1]	10	PHYAD[0]=0 VDDO_LEVEL=2.5V
VDDO	11	PHYAD[0]=1 VDDO_LEVEL=2.5V

Horizon Robotics

CONFIDENTIAL

NAME: 07_Ports_Ethernet	VERSION: V1.0
PROJECT: J5_DVB	
DESIGNER: Horizon Robotics	
DRAWING DATE: 20210128	
PAGE: 33 of 69	

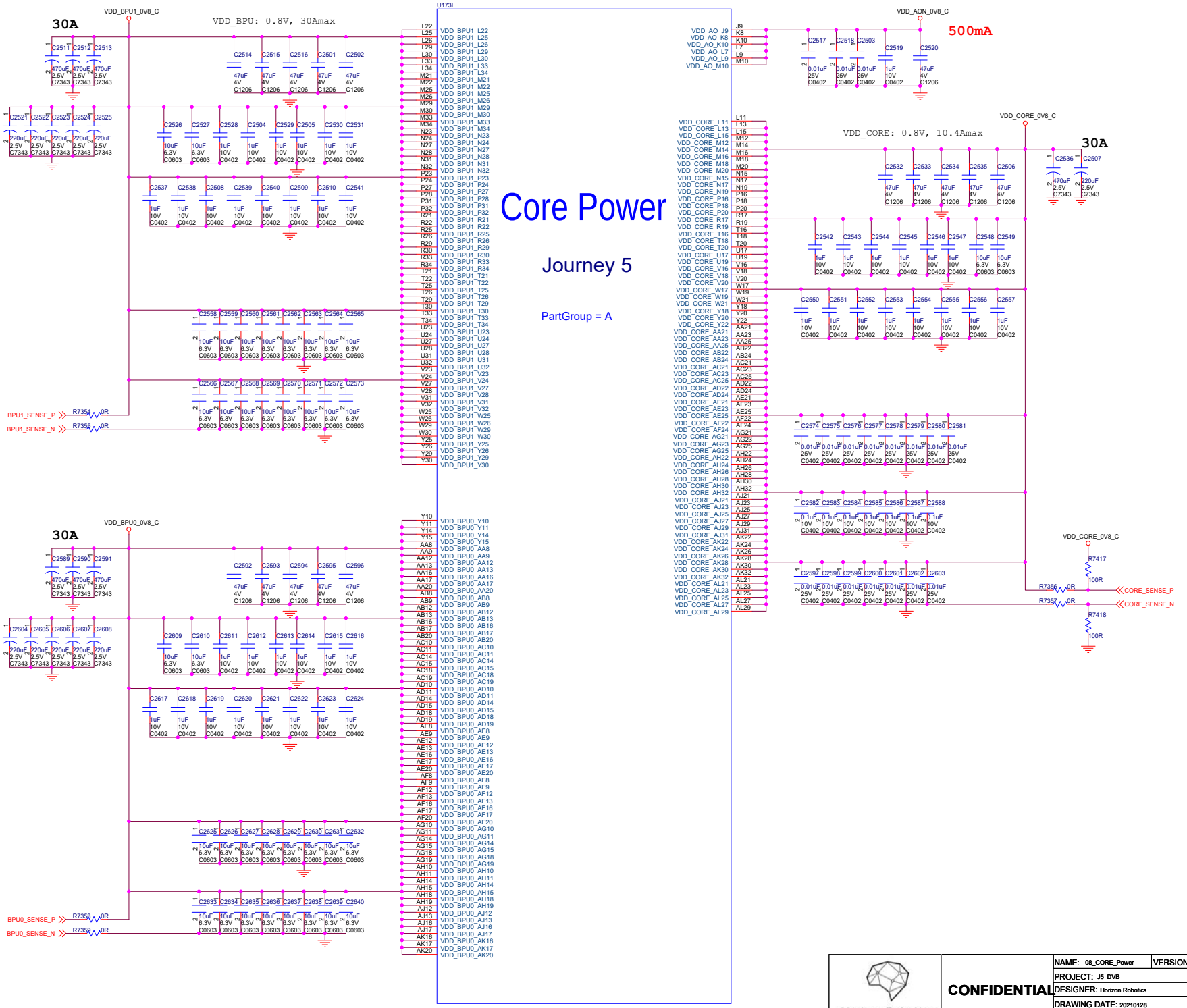
Core Power
Journey 5
PartGroup = A
U173I
VDD_BPU1_0V8_C
30A
VDD_BPU: 0.8V, 30Amax
VDD_BPU0_0V8_C
30A
VDD_AON_0V8_C
500mA
VDD_CORE_0V8_C
VDD_CORE: 0.8V, 10.4Amax
30A
VDD_CORE_0V8_C
BPU1_SENSE_P
BPU1_SENSE_N
BPU0_SENSE_P
BPU0_SENSE_N
CORE_SENSE_P
CORE_SENSE_N
Horizon Robotics
CONFIDENTIAL
NAME: 08_CORE_Power
VERSION: V1.0
PROJECT: J5_DVB
DESIGNER: Horizon Robotics
DRAWING DATE: 20210128
PAGE: 34 of 69

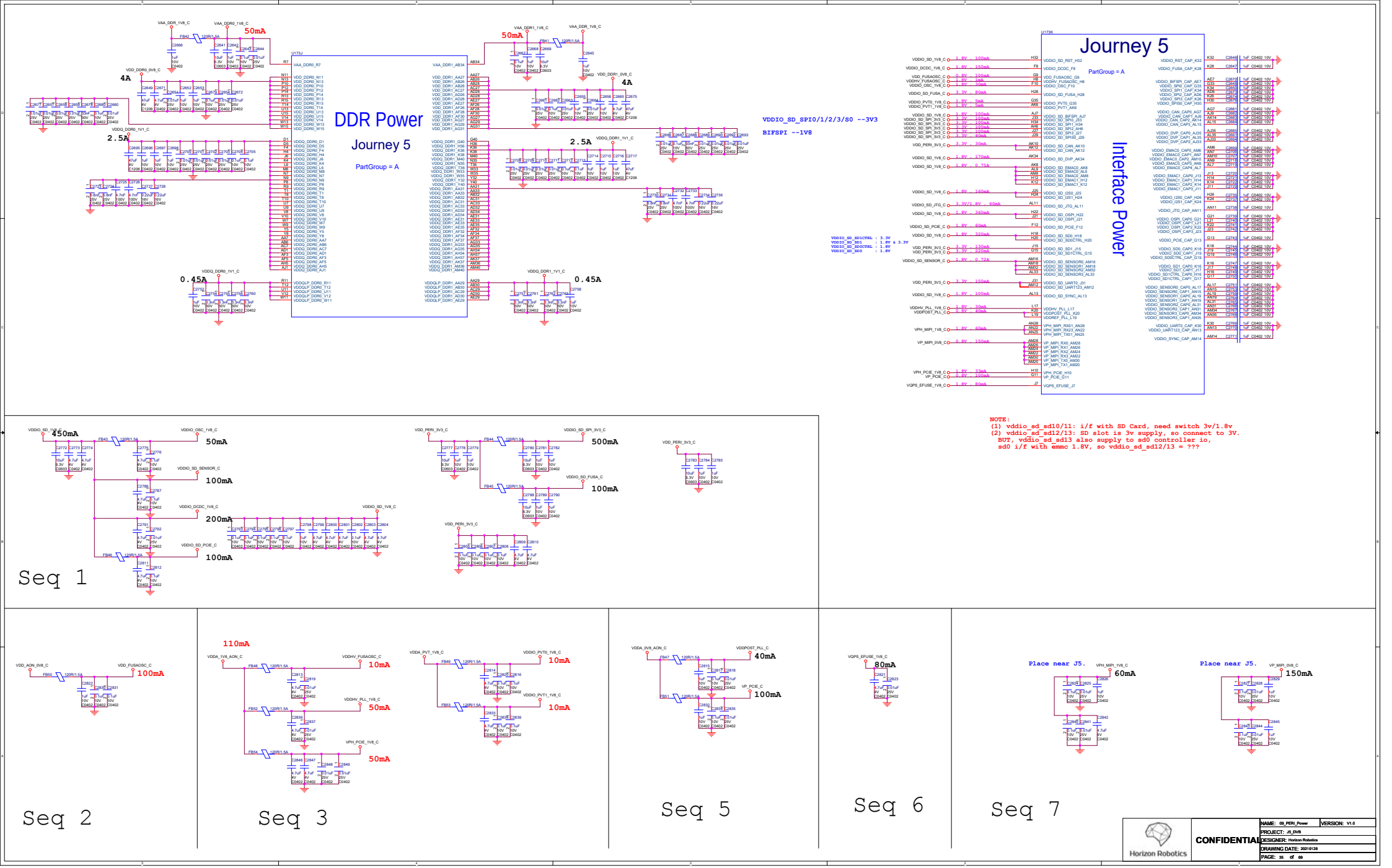
DDR Power
Journey 5
PartGroup = A
Journey 5
PartGroup = A
Interface Power
VDDIO_SD_SPI0/1/2/3/S0 --3V3
BIFSPI --1V8
NOTE:
(1) vddio_sd_sd10/11: i/f with SD Card, need switch 3v/1.8v
(2) vddio_sd_sd12/13: SD slot is 3v supply, so connect to 3V.
BUT, vddio_sd_sd13 also supply to sd0 controller io,
sd0 i/f with emmc 1.8V, so vddio_sd_sd12/13 = ???
Seq 1
Seq 2
Seq 3
Seq 5
Seq 6
Seq 7
Place near J5.
Place near J5.
CONFIDENTIAL
Horizon Robotics
NAME: 09_PERI_Power
VERSION: V1.0
PROJECT: J5_EVB
DESIGNER: Horizon Robotics
DRAWING DATE: 20210128
PAGE: 35 of 89

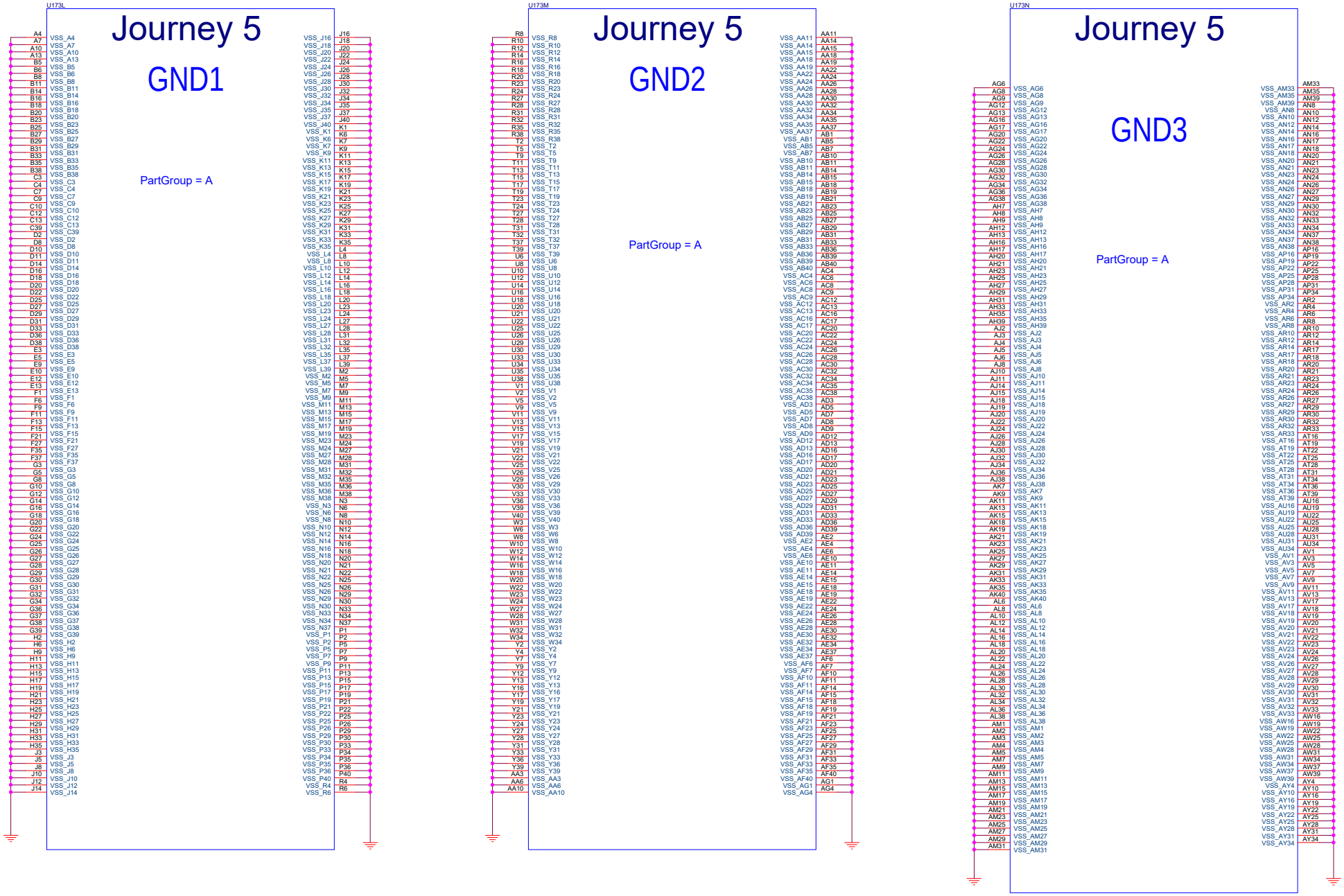

Horizon Robotics	CONFIDENTIAL	NAME: 10_Ground VERSION: V1.0
		PROJECT: J5_DVB
		DESIGNER: Horizon Robotics
		DRAWING DATE: 20210128
		PAGE: 36 of 69

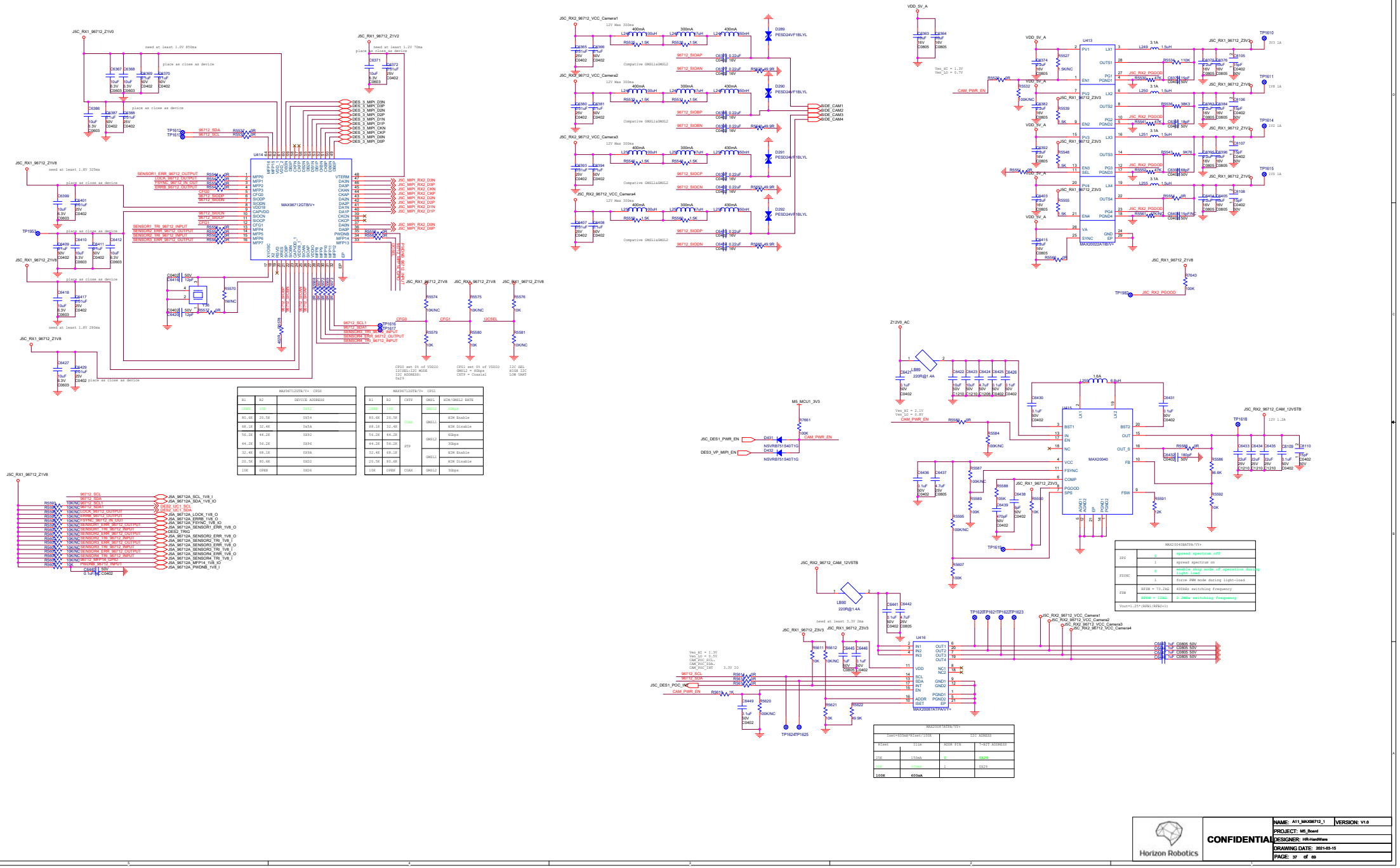

MAX96712GTB/V+ CFG0		
R1	R2	DEVICE ADDRESS
OPEN	10K	0X52
80.6K	20.5K	0X54
68.1K	32.4K	0x5A
56.2K	44.2K	0X92
44.2K	56.2K	0X96
32.4K	68.1K	0X9A
20.5K	80.6K	0XD2
10K	OPEN	0XD6

MAX96712GTB/V+ CFG1				
R1	R2	CSTP	GMSL	WIN/GMSL2 RATE
OPEN	10K		GMSL2	6Gbps
80.6K	20.5K	COAX	GMSL1	WIN Enable
68.1K	32.4K			WIN Disable
56.2K	44.2K		GMSL2	6Gbps
44.2K	56.2K	STP		3Gbps
32.4K	68.1K		GMSL1	WIN Enable
20.5K	80.6K			WIN Disable
10K	OPEN	COAX	GMSL2	3Gbps

MAX20040ATP/VY+		
SYNC	0	spread spectrum off
	1	spread spectrum on
FSYNC	0	enable skip mode of operation during light-load
	1	force PWM mode during light-load
FSW	RFSW = 73.2kΩ	400kHz switching frequency
	RFSW = 12kΩ	2.2MHz switching frequency
Vout=1.25*(RFB1/RFB2+1)		

MAX20087ATPA/VY+			
1set=400mA*2set/100K		I2C ADDRESS	
Rset	Ilim	ADDR PIN	7-BIT ADDRESS
25K	150mA	0	0X28
50K	300mA	1	0X29
100K	600mA		

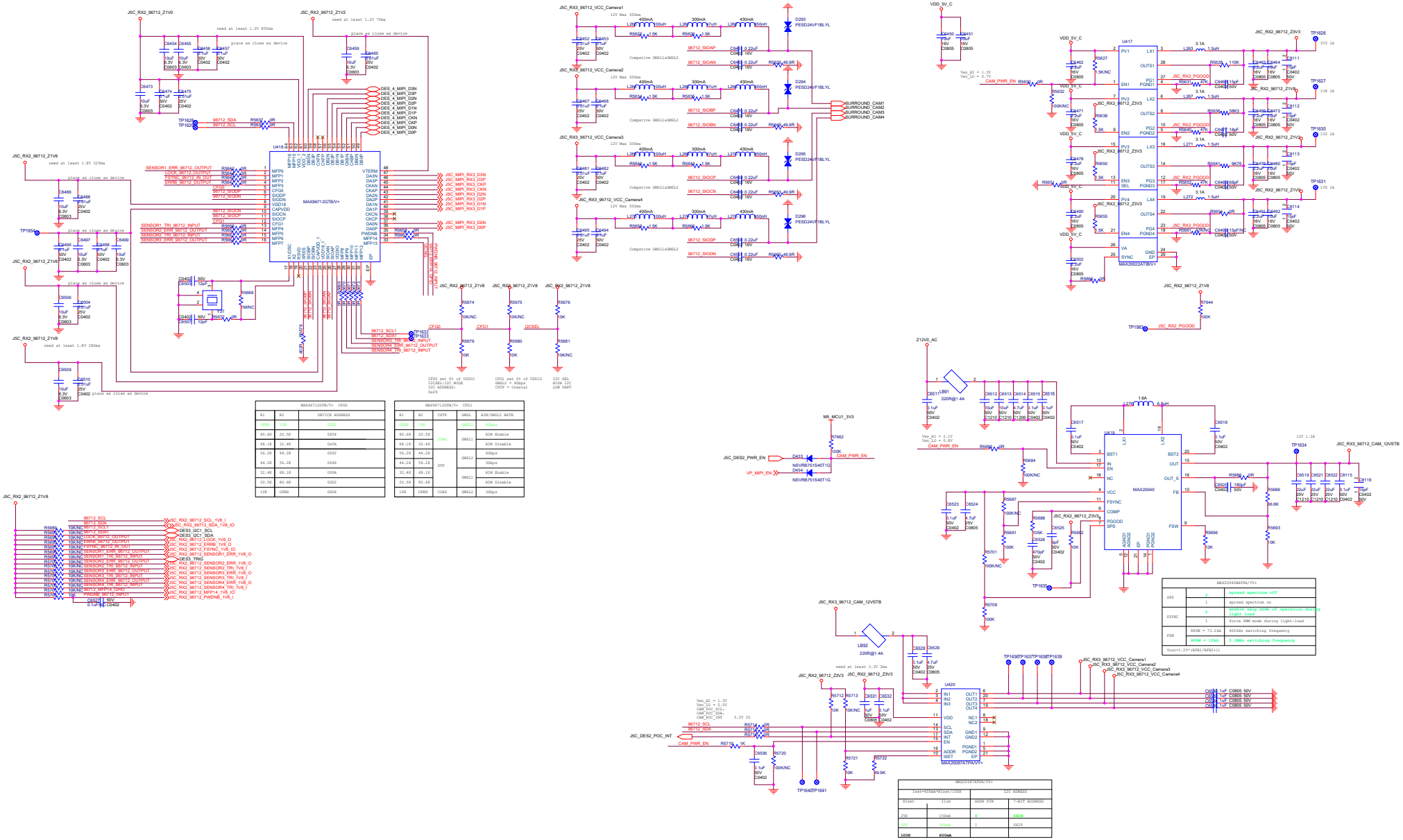

MAX96712GTB/V+ CFG0		
R1	R2	DEVICE ADDRESS
OPEN	10K	0x32
80.6K	20.5K	0x34
68.1K	32.4K	0x5A
56.2K	44.2K	0x92
44.2K	56.2K	0x96
32.4K	68.1K	0x9A
20.5K	80.6K	0xD2
10K	OPEN	0xD6

MAX96712GTB/V+ CFG1				
R1	R2	CXTP	GMSL1	RIN/GMSL2 RATE
OPEN	10K	COAX	GMSL1	6Gbps
80.6K	20.5K			RIN Disable
68.1K	32.4K		GMSL2	6Gbps
56.2K	44.2K	STP		RIN Disable
44.2K	56.2K		GMSL2	3Gbps
32.4K	68.1K		GMSL1	3Gbps
20.5K	80.6K			RIN Disable
10K	OPEN	COAX	GMSL2	3Gbps

MAX20040ATA/V+		
SPS	0	spread spectrum off
	1	spread spectrum on
PSYNC	0	enable skip mode of operation during light load
	1	force PWM mode during light-load
FSW	RFSW = 73.2kΩ	400kHz switching frequency
	RFSW = 12kΩ	2.2MHz switching frequency

Vout=1.25*(RFB1/RFB2+1)

MAX20087ATPA/V+			
Iset=400mA*Riset/100K		I2C ADRESS	
Riset	Ilim	ADDR PIN	7-BIT ADDRESS
25K	150mA	0	0x28
50K	300mA	1	0x29
100K	600mA		

Horizon Robotics	CONFIDENTIAL	NAME: A12_MAX96712_2 VERSION: V1.0
		PROJECT: M5_Board
		DESIGNER: HR-HardWare
		DRAWING DATE: 2021-03-15
		PAGE: 38 of 69

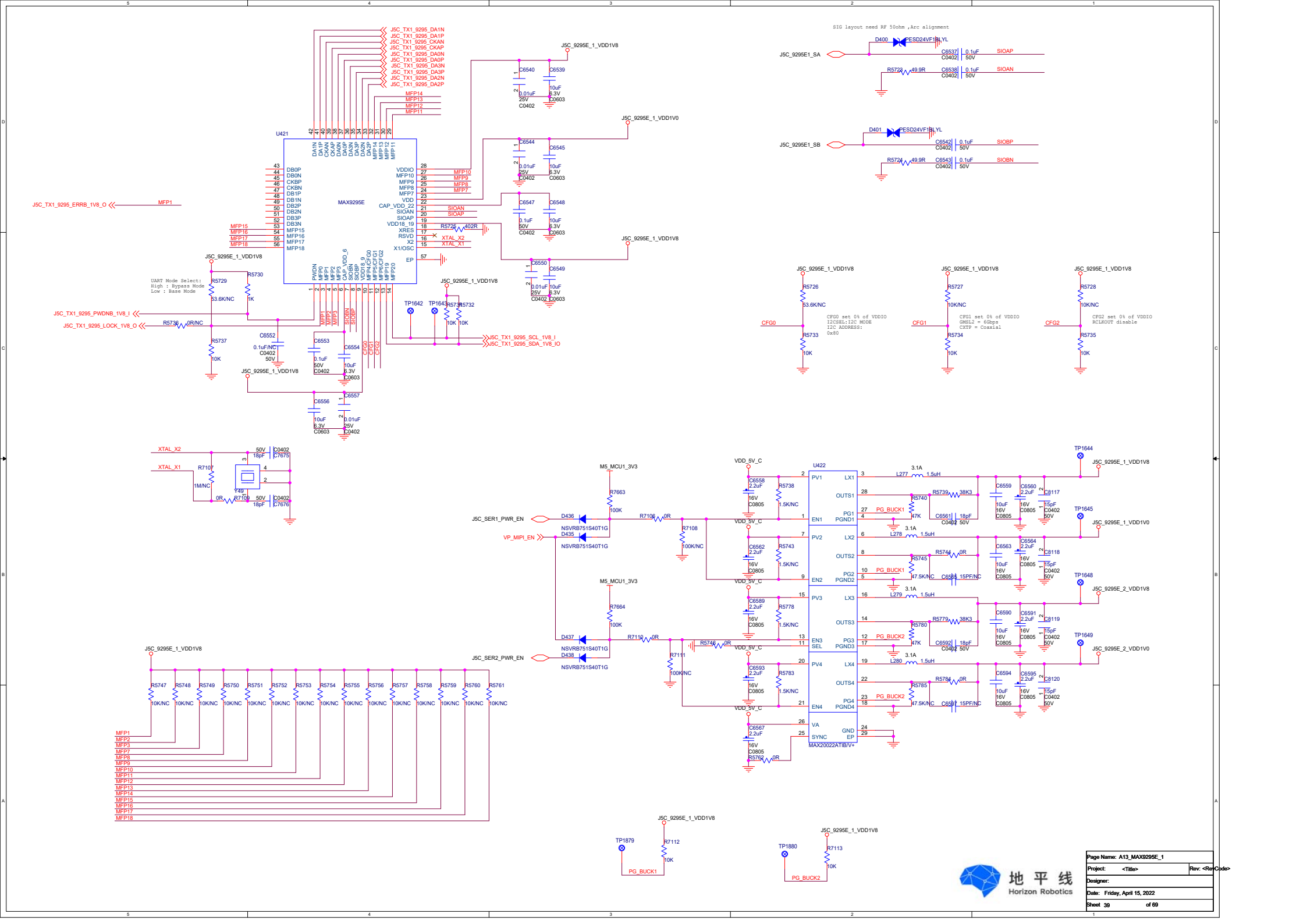

Page Name:	A13_MAX9295E_1
Project:	<Title>
Rev:	<RevCode>
Designer:	
Date:	Friday, April 15, 2022
Sheet	39 of 69

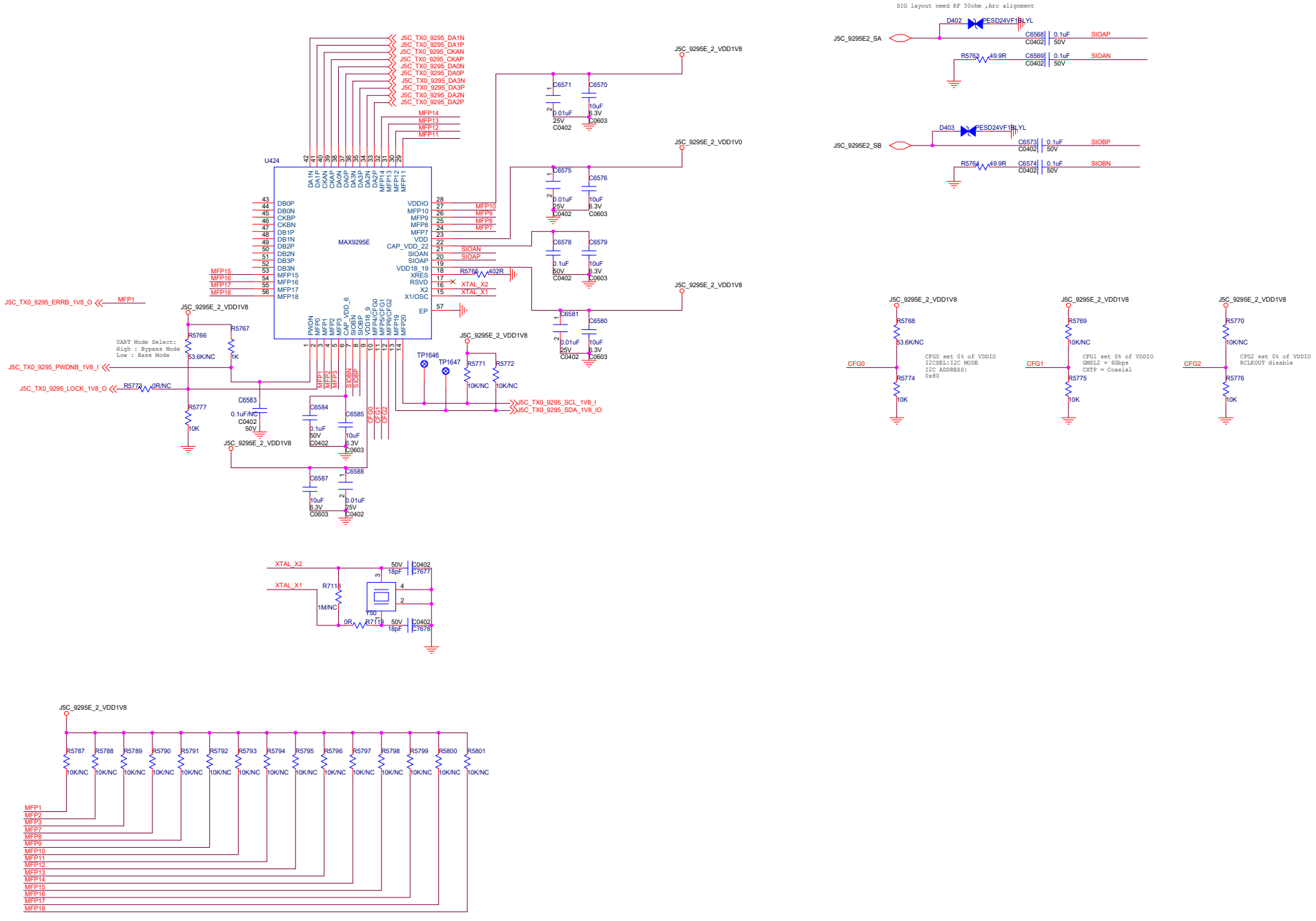

Page Name:	A14_MAX9295E_2
Project:	<Title>
Rev:	<RevCode>
Designer:	
Date:	Saturday, April 02, 2022
Sheet	40 of 69

地平线 Horizon Robotics

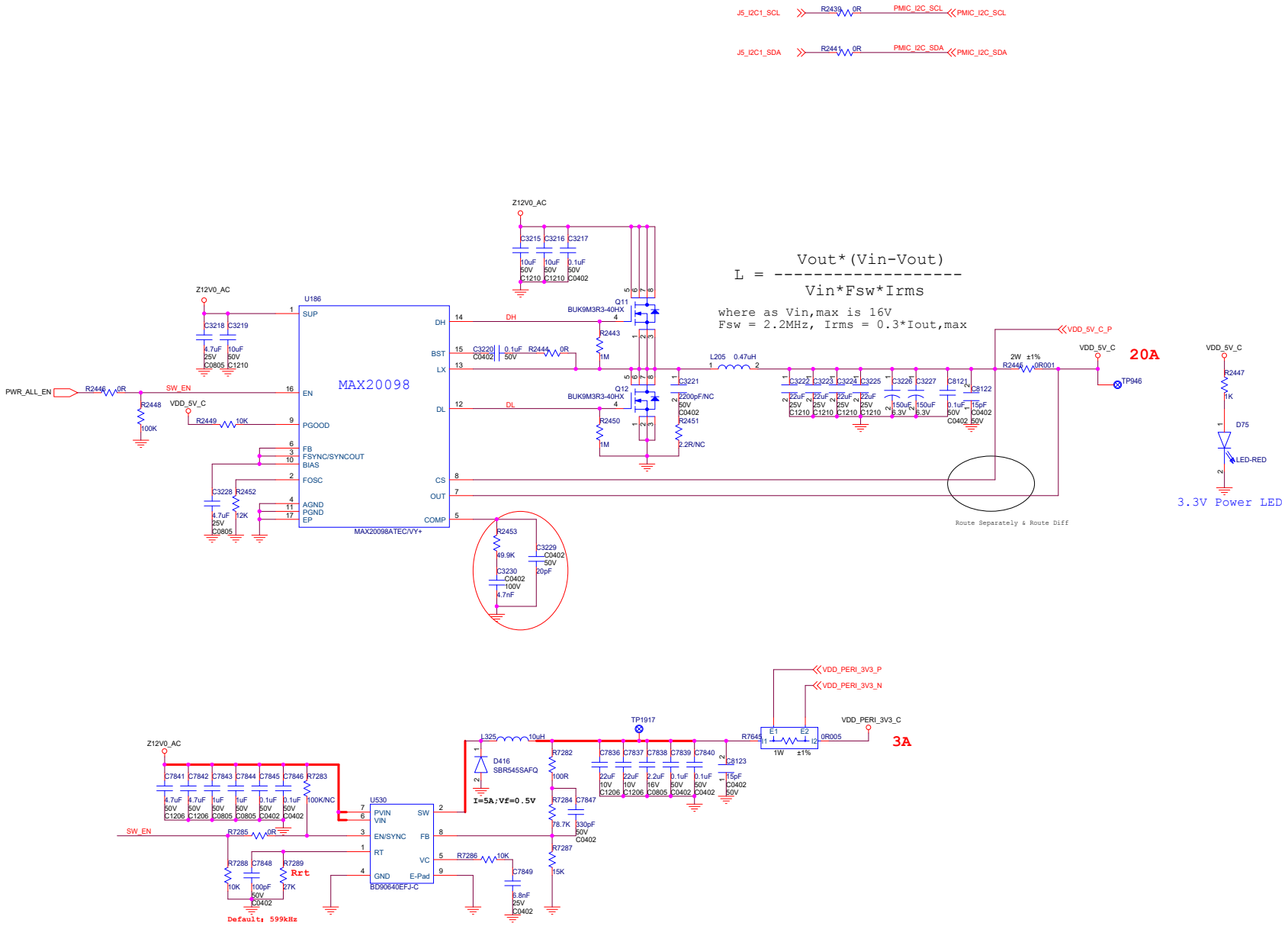

Horizon Robotics	CONFIDENTIAL	NAME: 02_Z5V0	VERSION: V1.0
		PROJECT: J5_DVB	
		DESIGNER: Horizon Robotics	
		DRAWING DATE: 20210128	
		PAGE: 42 of 69	

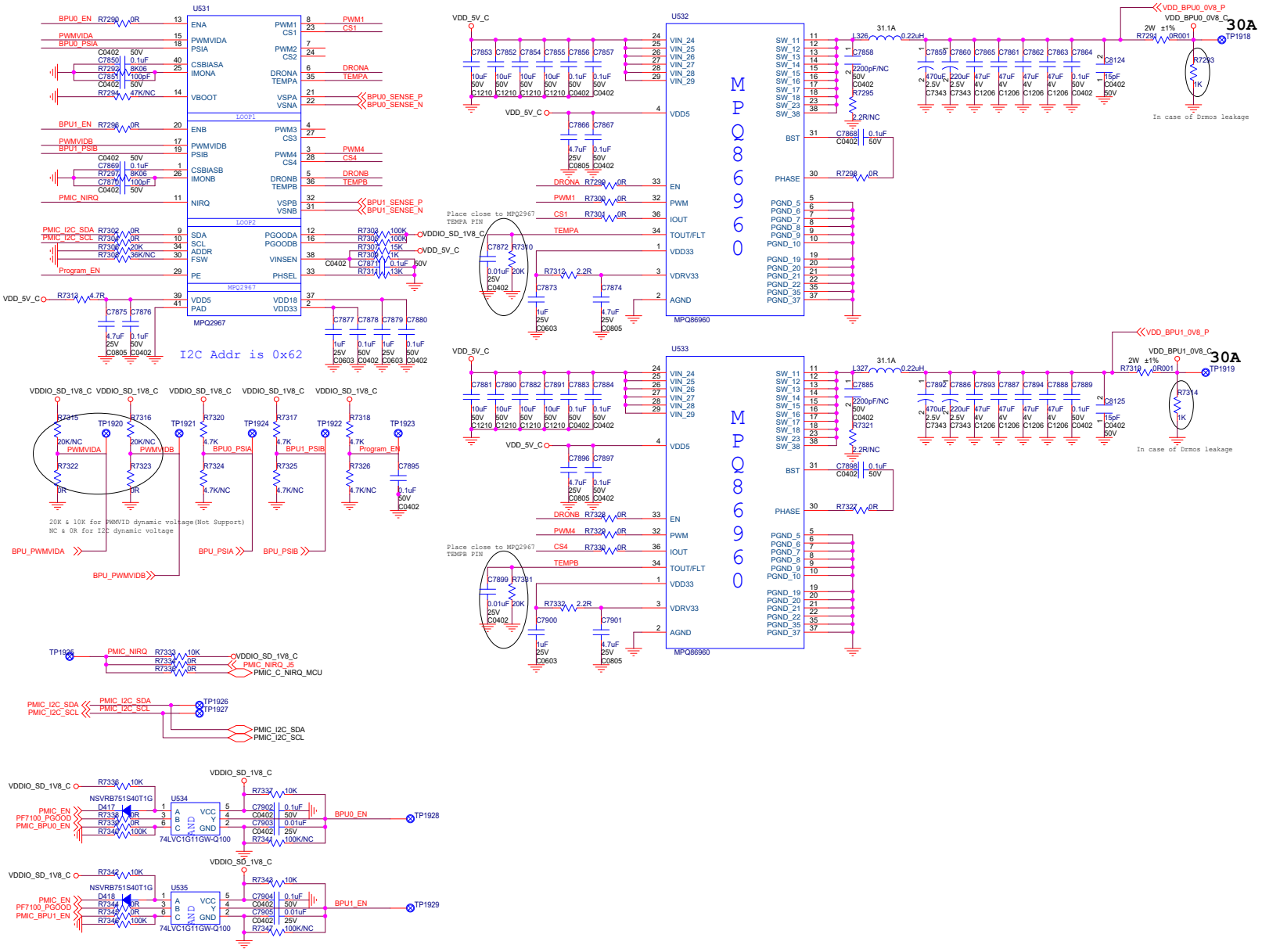

Title	<Title>		
Size C	Document Number <Doc>		Rev <RevCode>
Date: Saturday, April 02, 2022		Sheet 43 of 69	

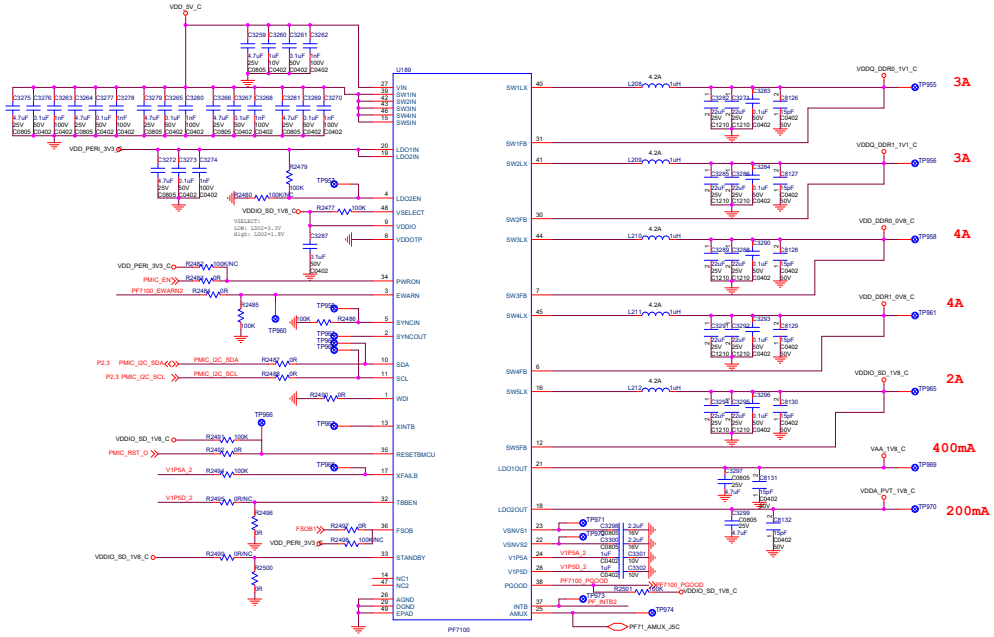

(1) DO NOT supply VQPS_EFUSE before PF7100_PG is High.
(2) Short TP1956 and TP1957 to supply VQPS_EFUSE.

PF7100 I2C Address is set by the OTP_I2C_ADD[2:0], range from 0x08~0x0F

Footprint:R0805

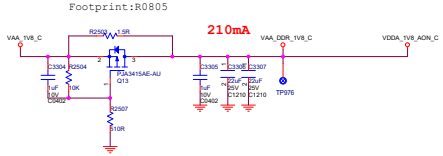

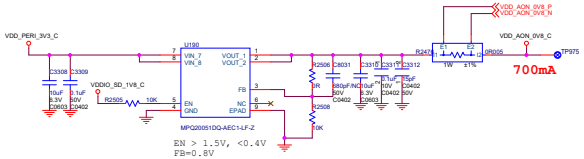

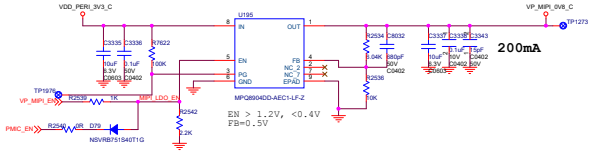

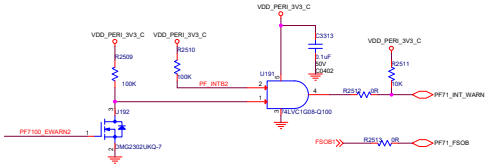

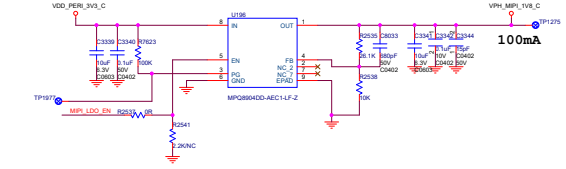

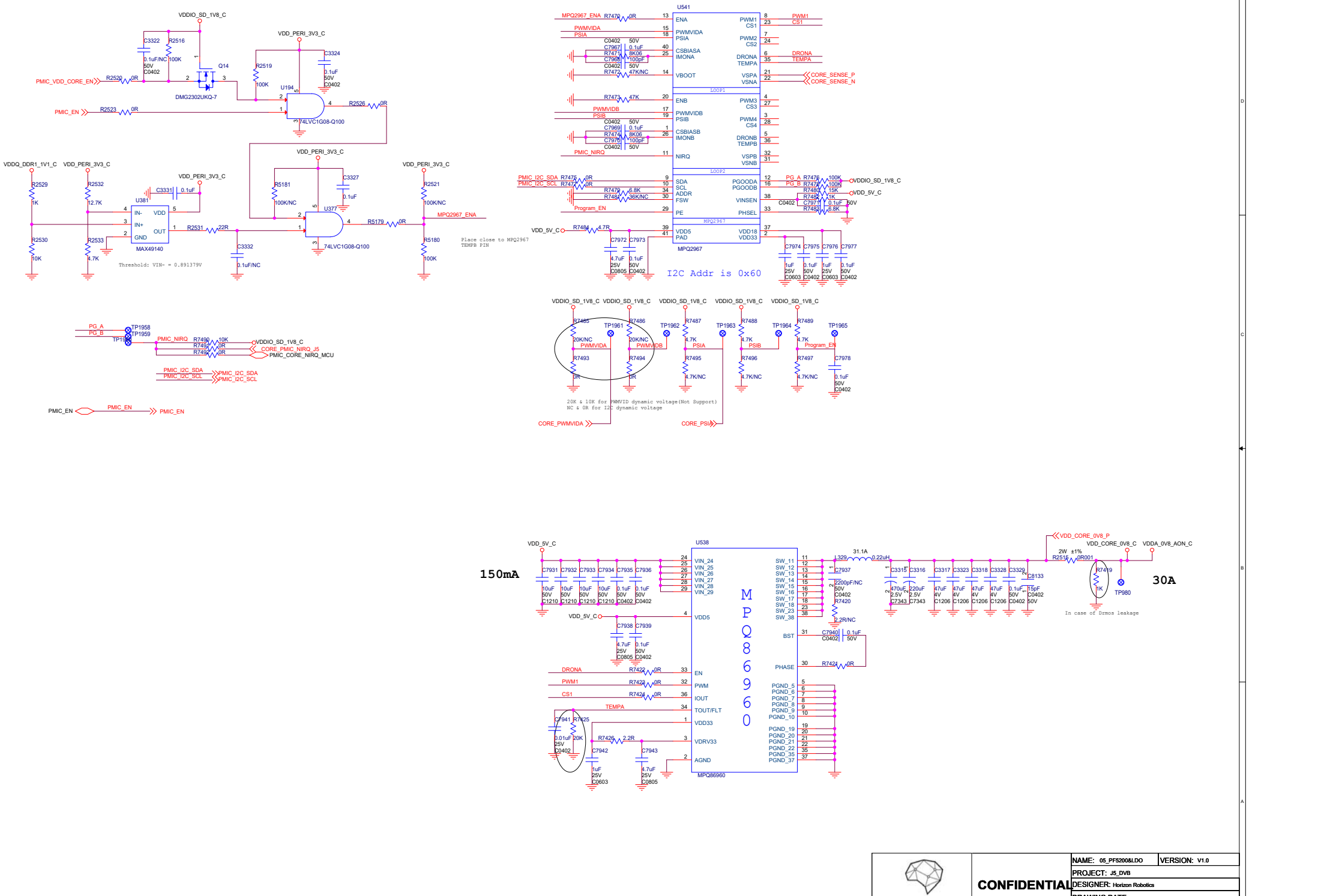

Horizon Robotics	**CONFIDENTIAL**	NAME: 05_PF5200&LDO VERSION: V1.0
		PROJECT: J5_DVB
		DESIGNER: Horizon Robotics
		DRAWING DATE: 20210128
		PAGE: 45 of 69

INA226 settings:
Shunt Voltage Register LSB : 2.5uV/bit
Bus Voltage Register LSB : 1.25mV/bit
Power Register LSB : 25*Current_LSB

Current_LSB = {Maximum Expected Current}/2^15
CAL = 0.00512/{Current_LSB * Rshunt}
Current_Register(04H) = {Shunt Voltage Register}*{CAL}/2048
Power = {Bus Voltage Register(02H)}*{Current_Register(04H)}/20000

(1) For Current rating up to 10A~20A level

$$Current\_LSB = \frac{10\ 000\ mA}{2^{15}} = 305.1757812\ uA/bit$$

Set Current_LSB as 1mA/bit
Rshunt = 0.001 Ohm , So

$$CAL = \frac{0.00512}{1\ mA/bit\ X\ 0.001\ Ohm} = 5120$$

(2) For Current rating up to <= 3A level

$$Current\_LSB = \frac{3\ 000\ mA}{2^{15}} = 91.55273438\ uA/bit$$

Set Current_LSB as 200uA/bit
Rshunt = 0.005 Ohm , So

$$CAL = \frac{0.00512}{200\ uA/bit\ X\ 0.005\ Ohm} = 5120$$

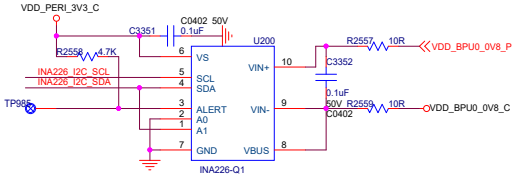

I2C Address: 100-1000 (0x48)

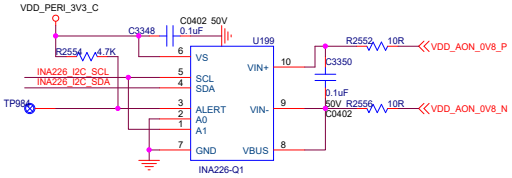

I2C Address: 100-1100 (0x4C)

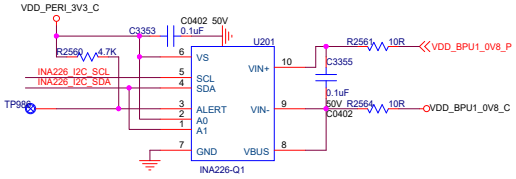

I2C Address: 100-1001 (0x49)

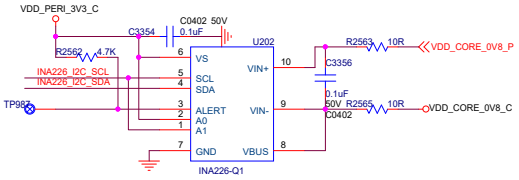

I2C Address: 100-1101 (0x4D)

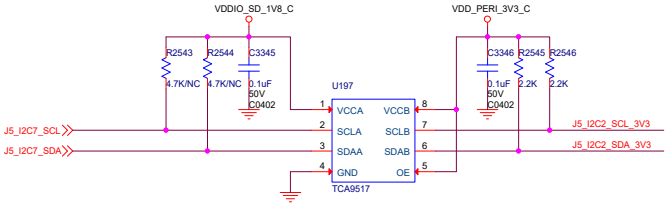

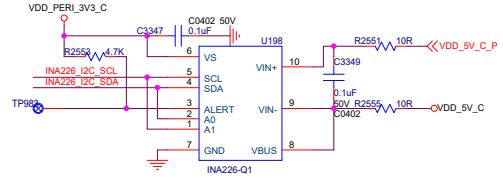

I2C Address: 100-1010 (0x4A)

I2C Address: 100-1110 (0x4E)

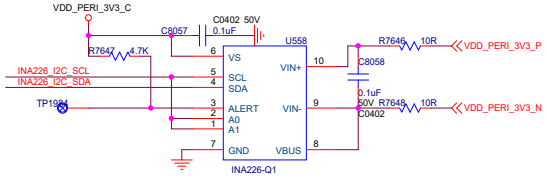

I2C Address: 100-1011 (0x4B)

I2C Address: 100-1111 (0x4F)

Horizon Robotics	CONFIDENTIAL	NAME: 07_Current_Sensor VERSION: V1.0
		PROJECT: J5_DVB
		DESIGNER: Horizon Robotics
		DRAWING DATE: 20210128
		PAGE: 46 of 69

(2) C_bootstrap value > 10x Cgs_Q
(3) Place resistor between Gate_Source of Q

Ffilter=1/(2xpi xsq(LC)) = 160Hz (C=10uF, L=1uH)
(L=1uH, C=50uF => Ffilter=71Hz)

(1) The Ffilter should be placed very carefully, refer to the datasheet.

3.3V, 10A

3.3V, 1A

5V, 1A

3.3V, 455KHz

BUCK1, 3.6A

BUCK2, 3.6A

BUCK2=1.1V by defualt OTP of PVR5510AMDALES

LDO1_400mA

LDO2_400mA

LDO3_400mA

HVLDO_100mA

VDD_DDR_1V1, 3.6A

FCCU12_FLT_POL = 0

400mA

400mA

100mA

400mA

BUCK1, 3.6A

10A

BUCK2, 3.6A

BUCK1, 3.6A

3.6A

3.3V, 3A

0.8V@10A max

Core Supply for S32G3

NAME: 01_VR5510	VERSION: V1.0
PROJECT: S32G	
DESIGNER: Horizon Robotics	
DRAWING DATE: 2021122	
PAGE: 47 of 89	

Horizon Robotics

CONFIDENTIAL

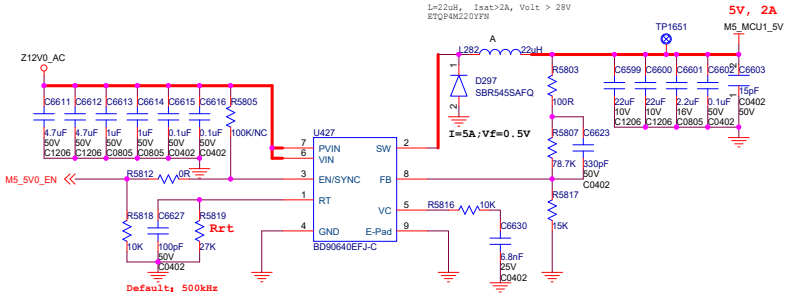

Horizon Robotics

CONFIDENTIAL

NAME: 01_VR5510	VERSION: V1.0
PROJECT: S32G	
DESIGNER: Horizon Robotics	
DRAWING DATE: 20211122	
PAGE: 48 of 69	

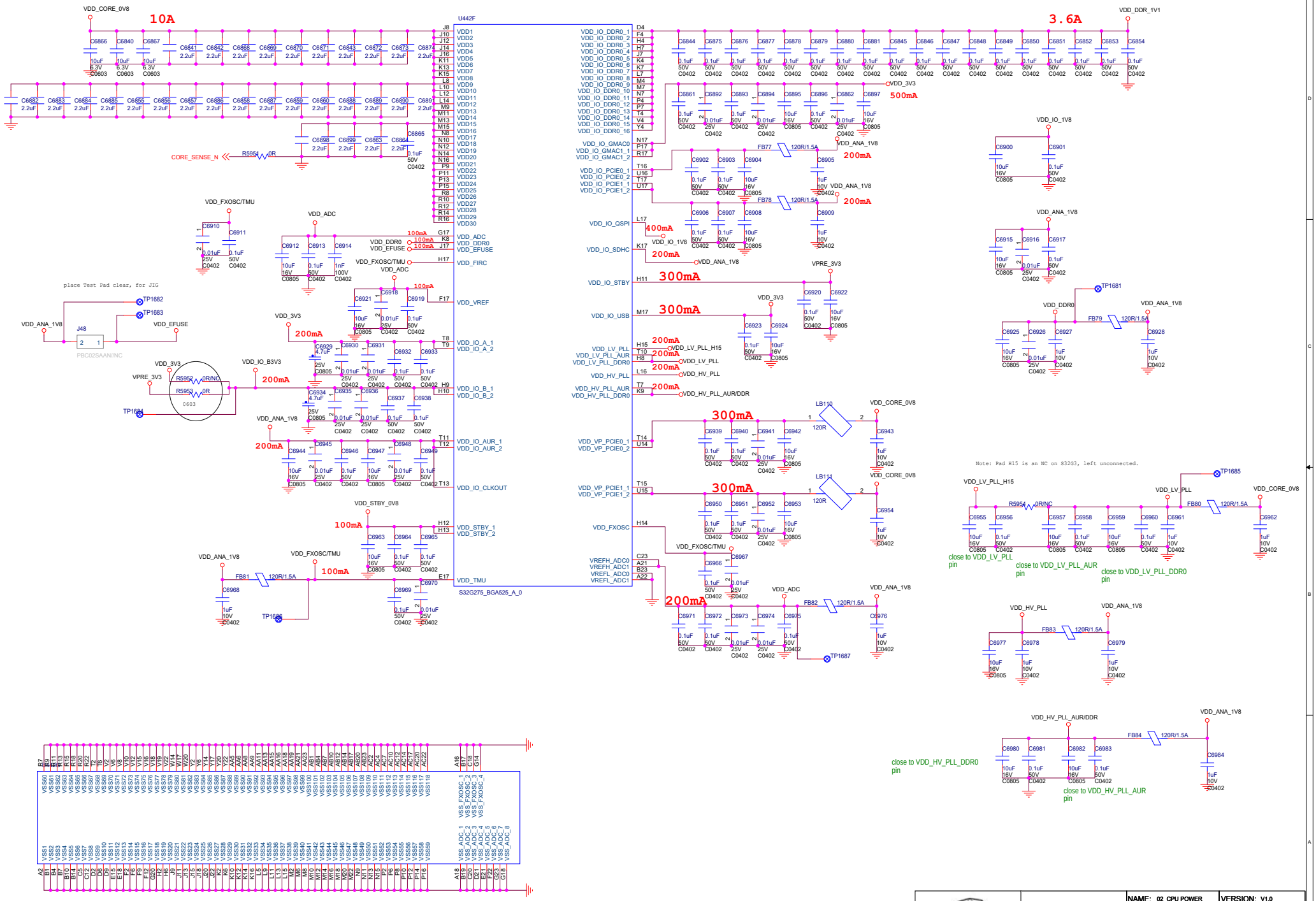

Horizon Robotics

CONFIDENTIAL

NAME: 02_CPU POWER	VERSION: V1.0
PROJECT: S32G	
DESIGNER: Horizon Robotics	
DRAWING DATE: 20211122	
PAGE: 49 of 69	

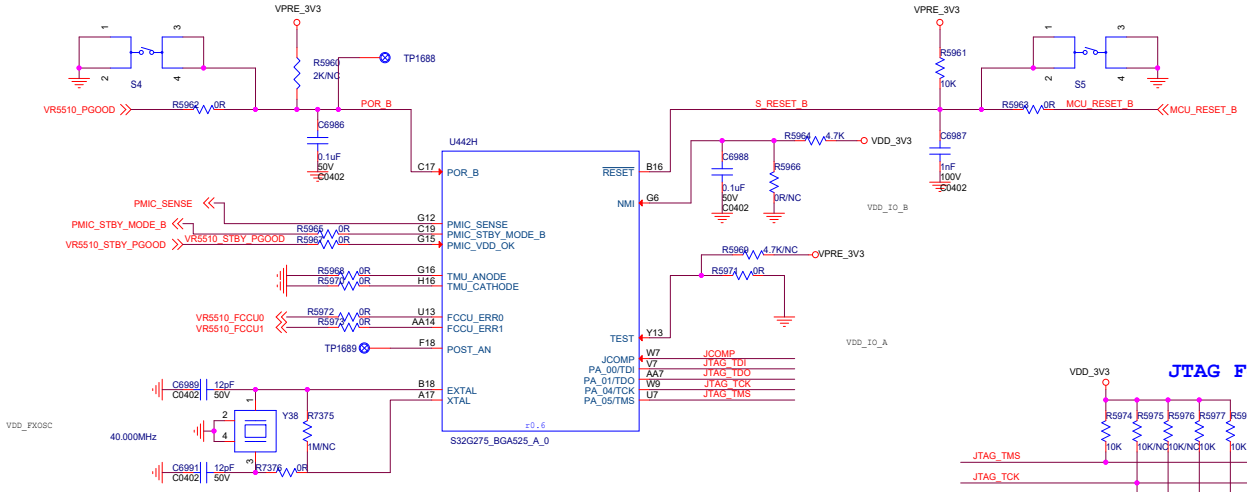

Horizon Robotics	CONFIDENTIAL	NAME: 04_RESET_JTAG VERSION: V1.0
		PROJECT: S32G
		DESIGNER: Horizon Robotics
		DRAWING DATE: 20211122
		PAGE: 50 of 69

LPDDR4 4GB

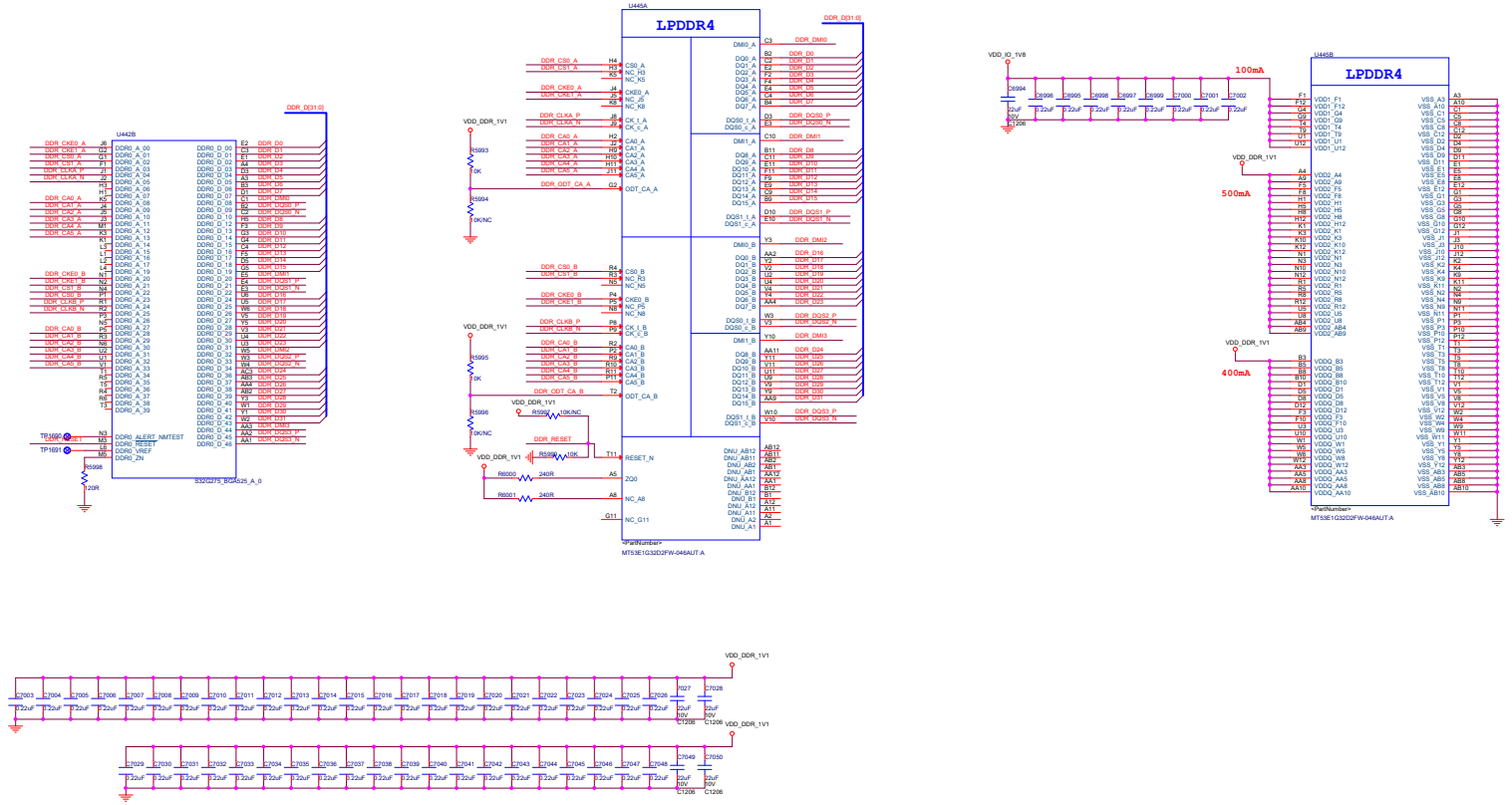

Horizon Robotics	CONFIDENTIAL	NAME: 03_LPDDR4	VERSION: V1.0
		PROJECT: S30G	
		DESIGNER: Horizon Robotics	
		DRAWING DATE: 2021/1/22	
		PAGE: 51 of 89	

Serial NOR FLASH 64MB

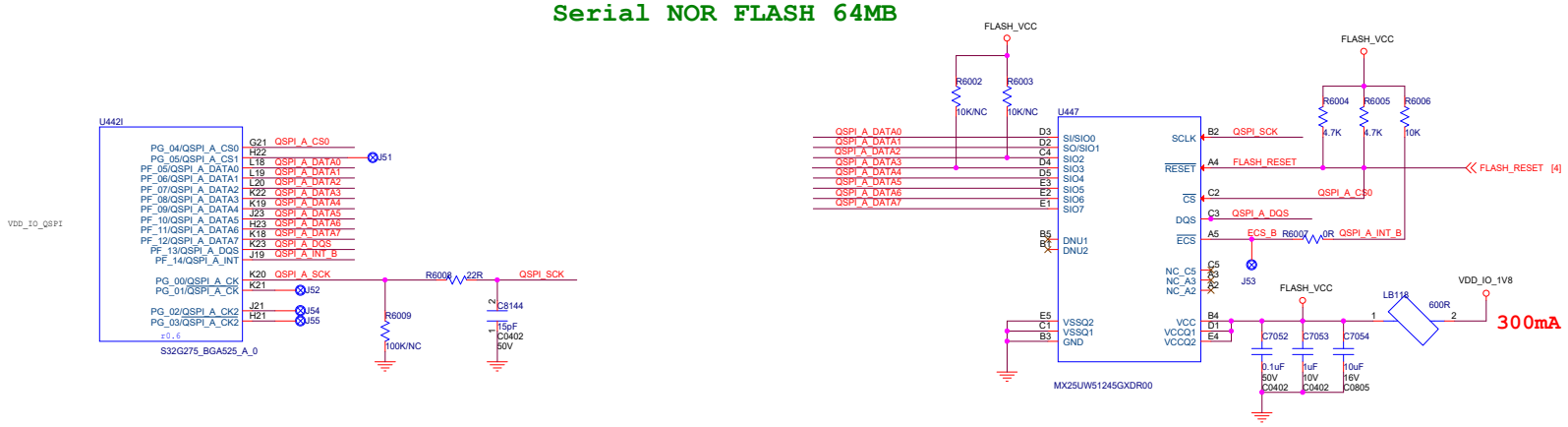

32GB eMMC MEMORY 5.1

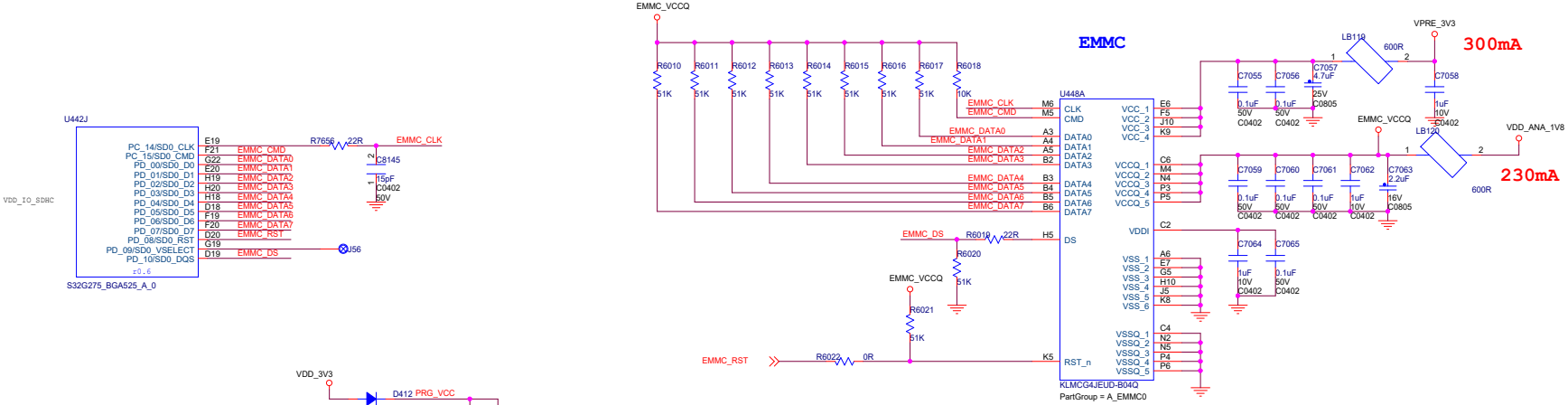

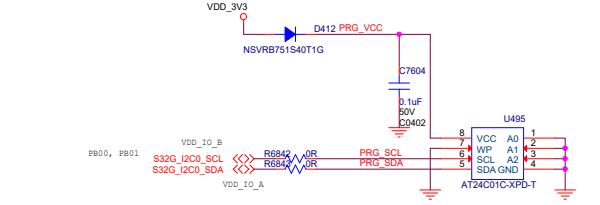

I2C0 ADDR: 0XA0

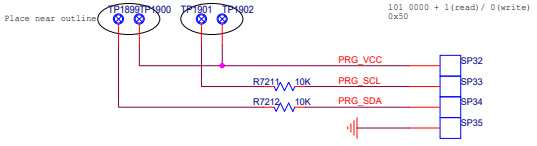

Horizon Robotics	CONFIDENTIAL
NAME: 05_FLASH_EMMC	VERSION: V1.0
PROJECT: S32G	
DESIGNER: Horizon Robotics	
DRAWING DATE: 20211122	
PAGE: 52 of 69	

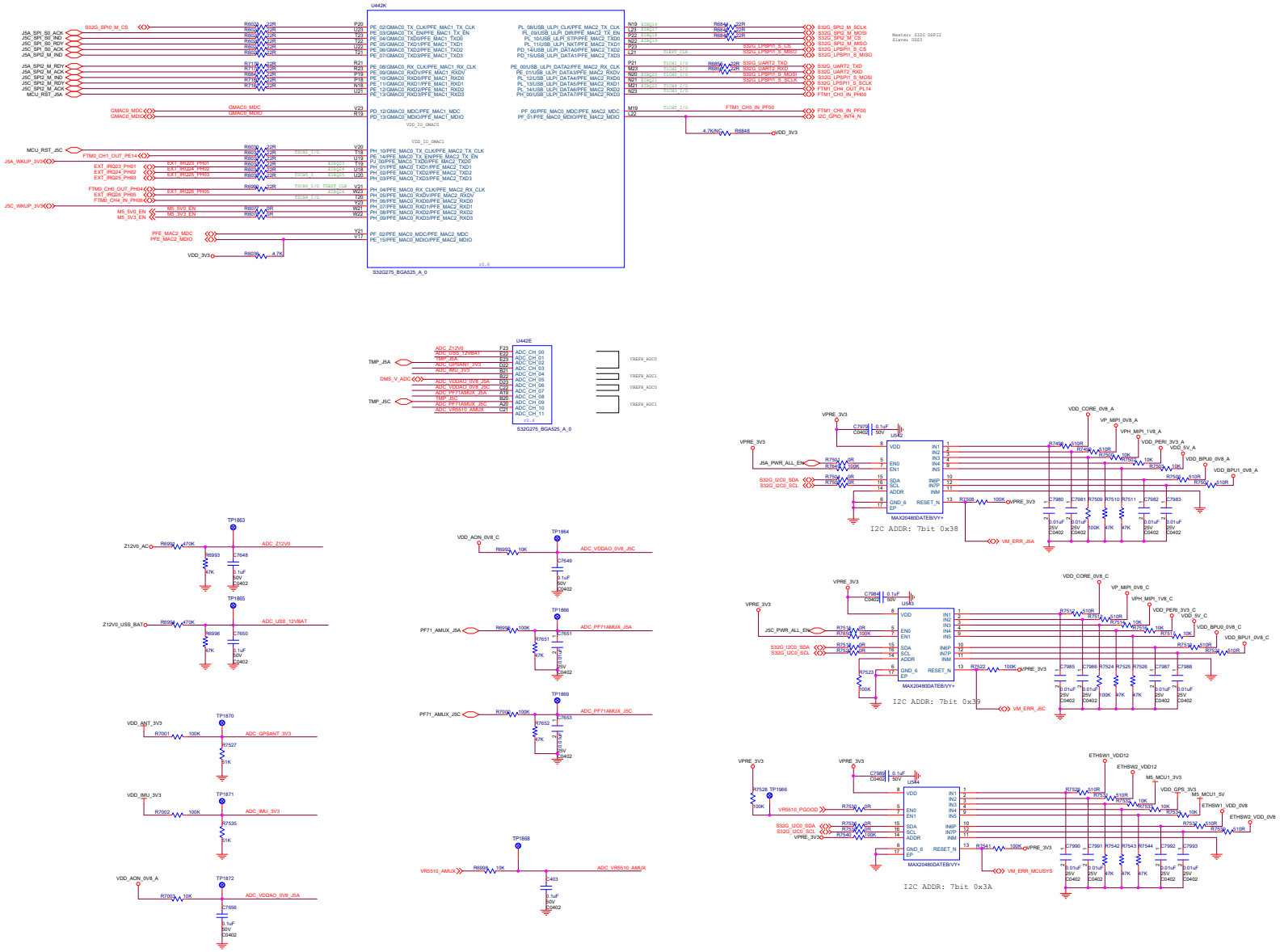

Horizon Robotics	CONFIDENTIAL
NAME: 08_MAC	VERSION: V1.0
PROJECT: S32G	
DESIGNER: Horizon Robotics	
DRAWING DATE: 2021/1/22	
PAGE: 53 of 89	

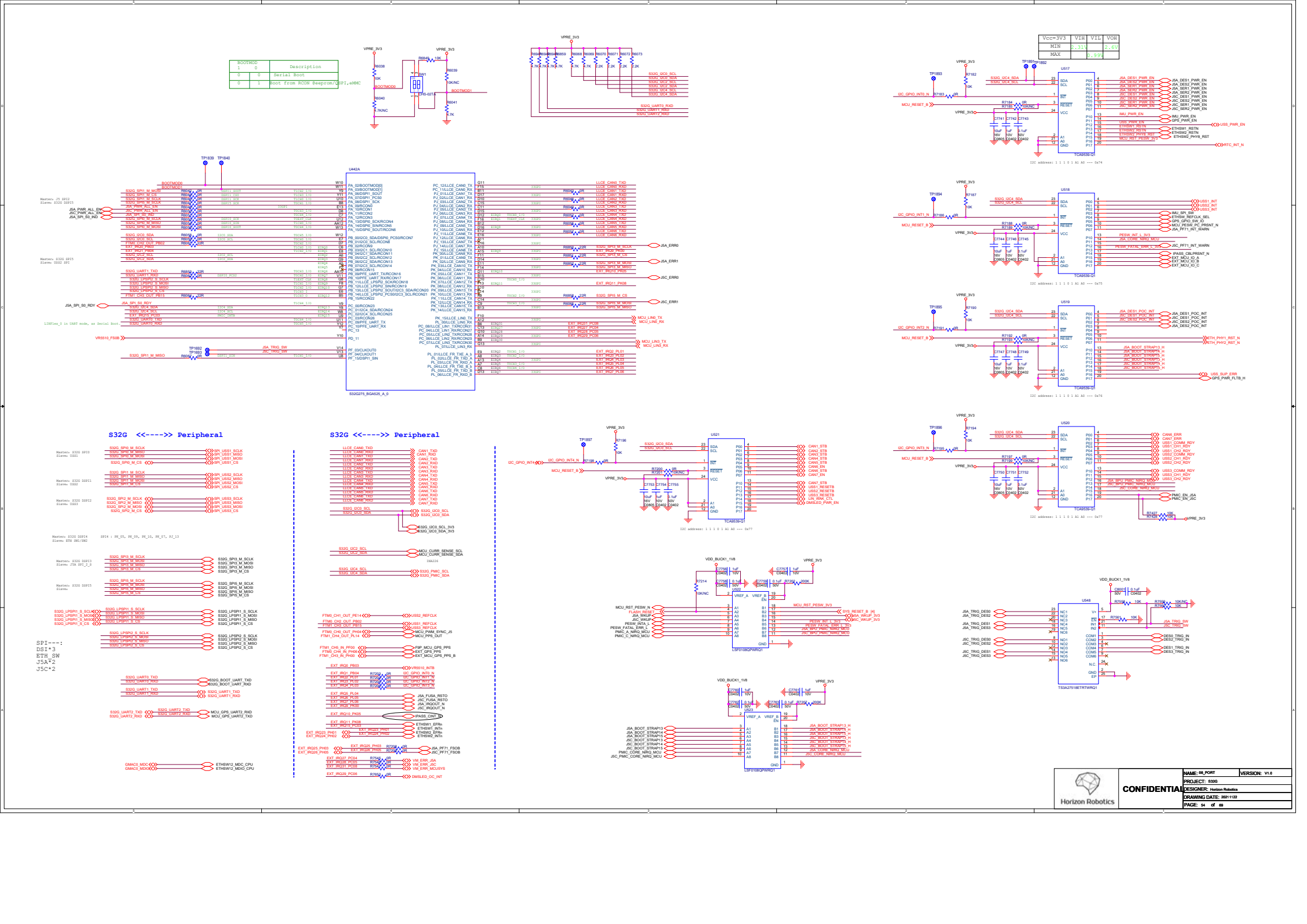
BOOTMOD
Description
Serial Boot
Boot from RCON @eeprom/CSPI,eMMC
Vcc=3V3 | VIH | VIL | VOH
MIN | 2.31V | | 2.6V
MAX | | 2.99V |
S32G <<----->> Peripheral
S32G <<----->> Peripheral
SPI---:
DSI*3
ETH_SW
J5A*2
J5C*2
Horizon Robotics
CONFIDENTIAL
NAME: 08_PORT
VERSION: V1.0
PROJECT: S32G
DESIGNER: Horizon Robotics
DRAWING DATE: 2021122
PAGE: 54 of 89

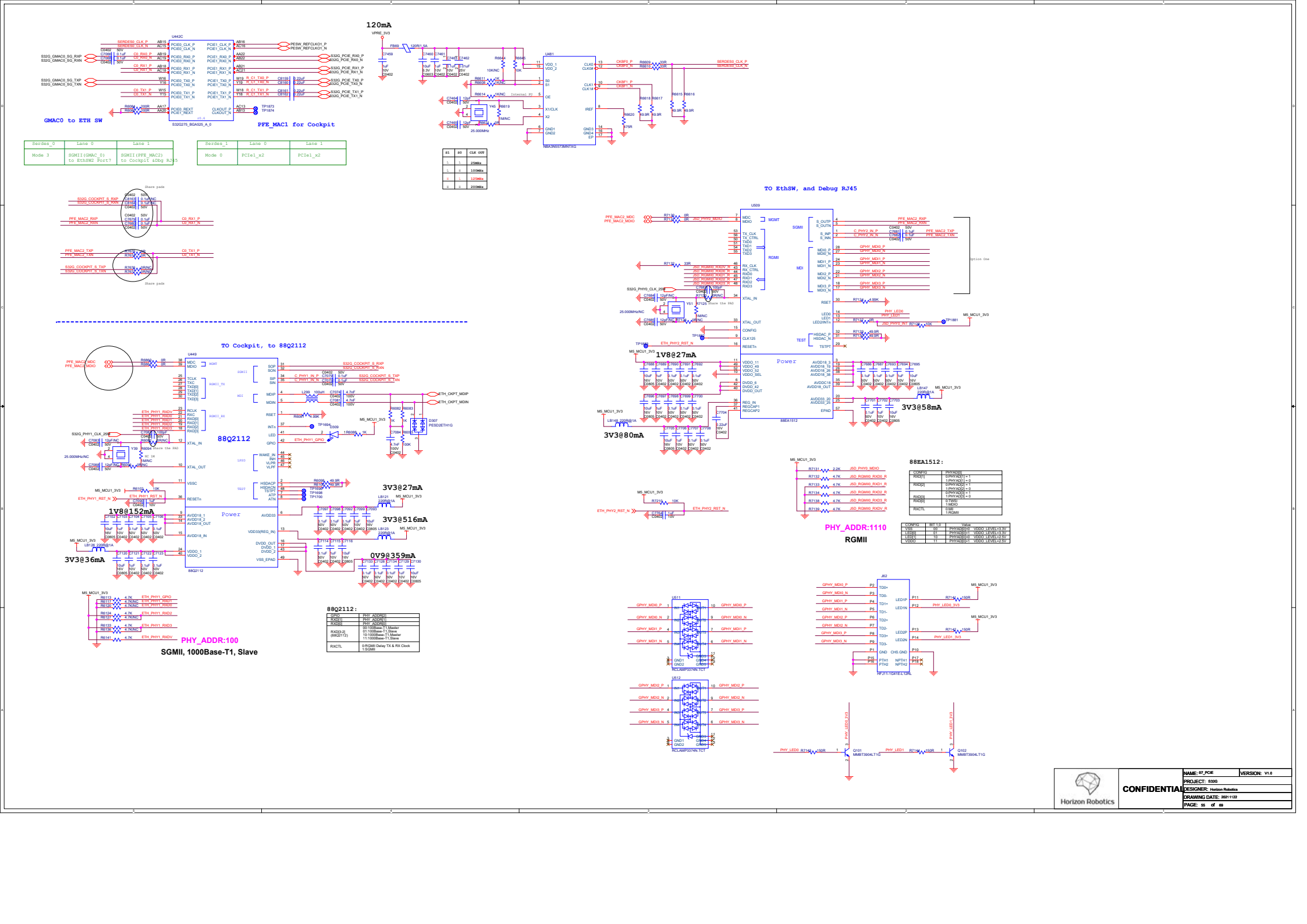

Serdes_0	Lane 0	Lane 1
Mode 3	SGMII(GMAC_0) to EthSW2 Port7	SGMII(PFE_MAC2) to Cockpit &Dbg RJ45

Serdes_1	Lane 0	Lane 1
Mode 0	PCIe1_x2	PCIe1_x2

S1	S0	CLK OUT
L	L	25MHz
L	H	100MHz
H	L	125MHz
H	H	200MHz

88Q2112:

GPIO	PHY_ADDR[2]
RXD[1]	PHY_ADDR[1]
RXD[0]	PHY_ADDR[0]
RXD[3:2] (88Q2112)	00:1000Base-T1,Master 01:1000Base-T1,Slave 10:100Base-T1,Master 11:100Base-T1,Slave
RXCTL	0:RGMII Delay TX & RX Clock 1:SGMII

88EA1512:

CONFIG	PHYAD[0]
RXD[1]	0:PHYAD[1] = 1 1:PHYAD[1] = 0
RXD[2]	0:PHYAD[2] = 1 1:PHYAD[2] = 0
RXD[3]	0:PHYAD[3] = 1 1:PHYAD[3] = 0
RXD[0]	0:TWSI 1:MDIO
RXCTL	0:MII 1:RGMII

CONFIG	BIT_1:0	Value
VSS	00	PHYAD[0]=0 VDDO_LEVEL=3.3V
LED[0]	01	PHYAD[0]=1 VDDO_LEVEL=3.3V
LED[1]	10	PHYAD[0]=0 VDDO_LEVEL=2.5V
VDDO	11	PHYAD[0]=1 VDDO_LEVEL=2.5V

CONFIDENTIAL
Horizon Robotics

NAME: 07_PCIE	VERSION: V1.0
PROJECT: S32G	
DESIGNER: Horizon Robotics	
DRAWING DATE: 2021122	
PAGE: 55 of 89	

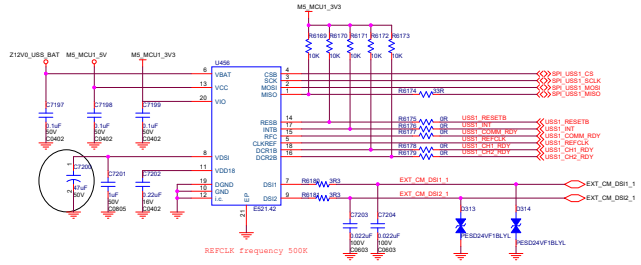

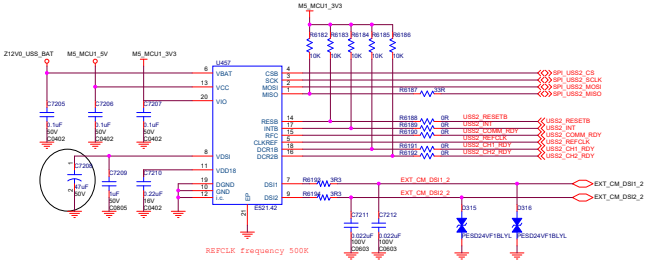

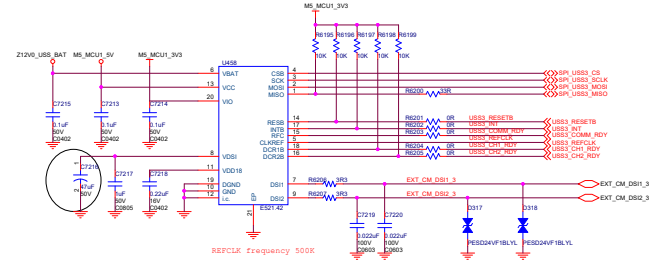

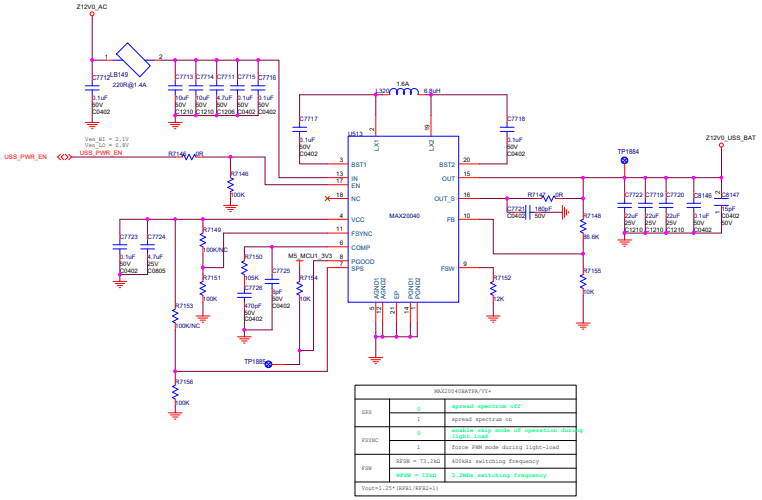

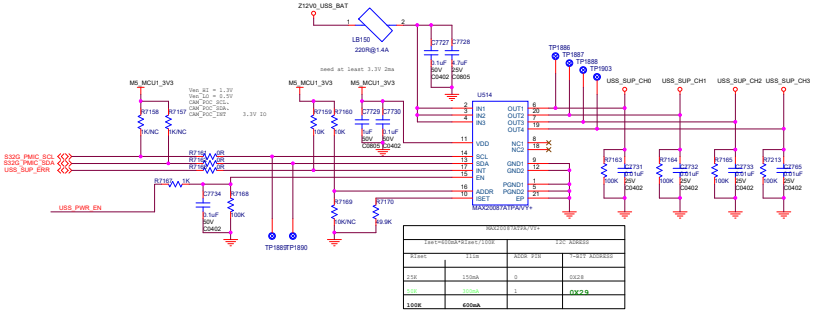

Page Name: 10_USS	
Project: <Title>	Rev: <Rev Code>
Designer:	
Date: Saturday, April 02, 2022	
Sheet 56 of 69	

地平线 Horizon Robotics

Use VPRE_3V3 ?

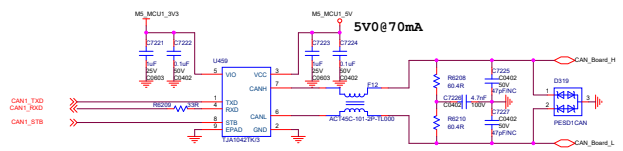

Private_CAN

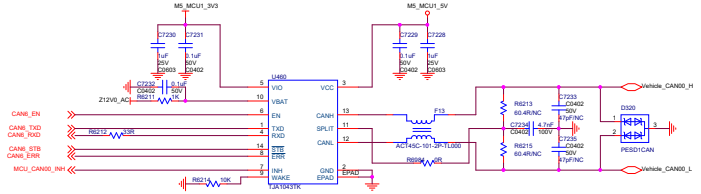

Vehicle CAN00

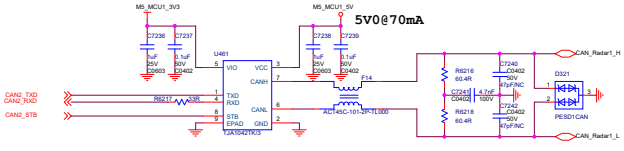

Radar_CAN1

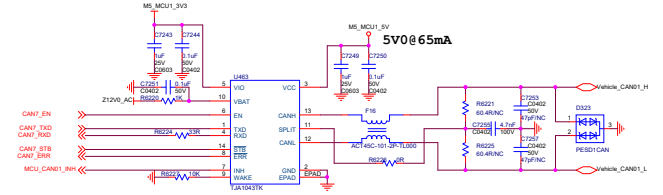

Vehicle CAN01

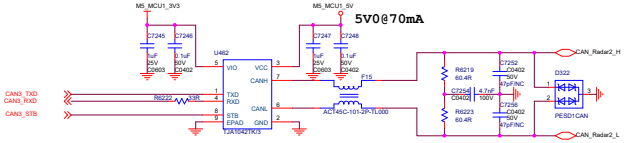

Radar_CAN2

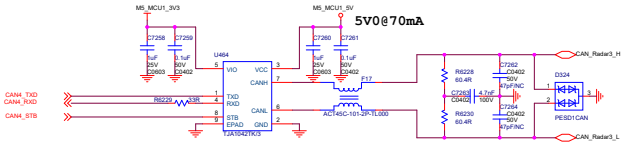

Radar_CAN3

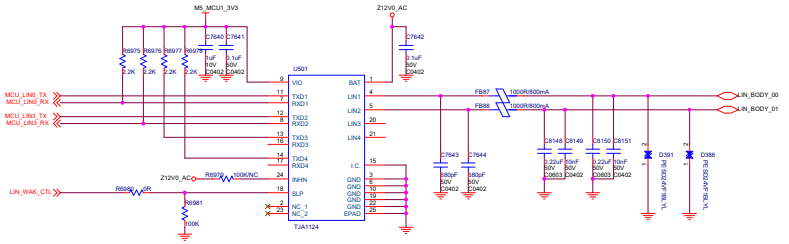

LIN

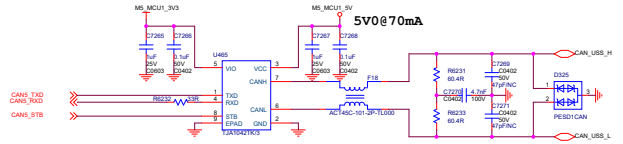

IMU or USS

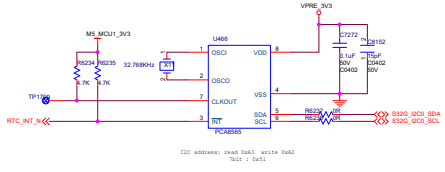

RTC

Page Name: 11_CAN_LIN_RTC	
Project: <Title>	Rev: <Revision Code>
Designer:	
Date: Thursday, April 21, 2022	
Sheet 57	of 69

地平线 Horizon Robotics

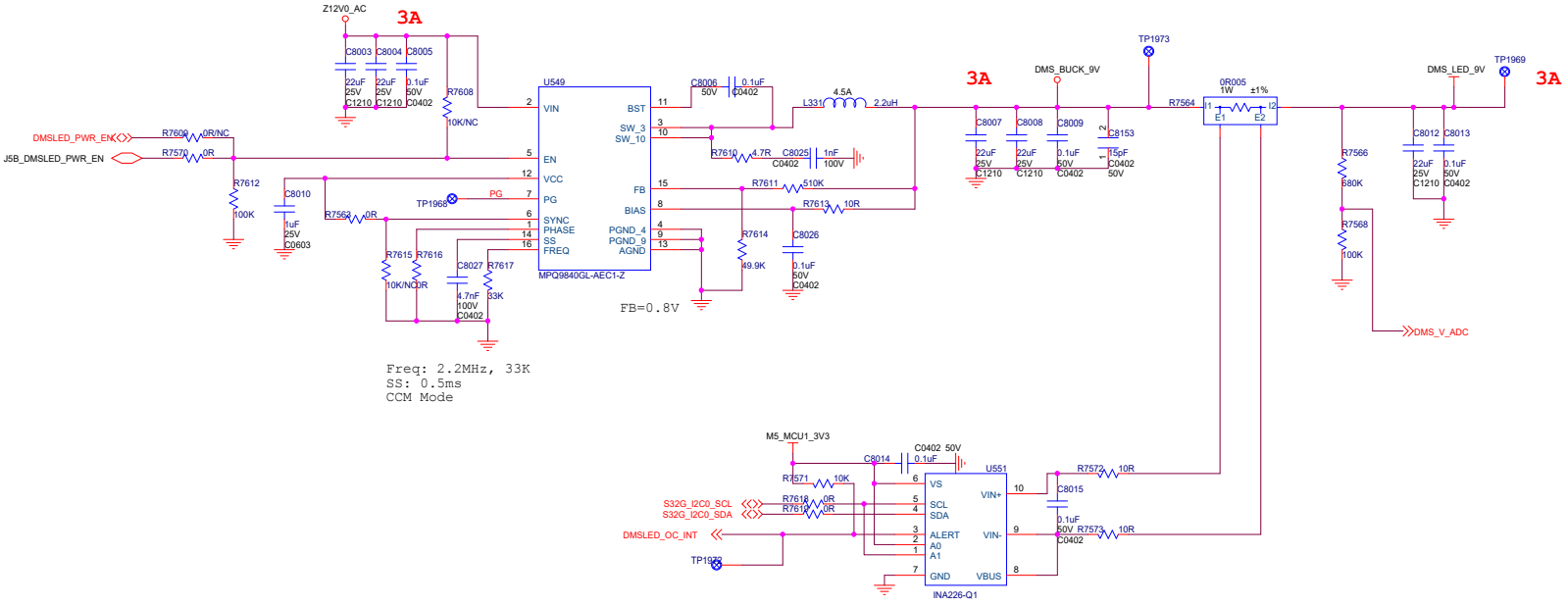

Page Name:	12_DMS_IRLED
Project:	<Title>
Rev:	<RevCode>
Designer:	
Date:	Wednesday, April 13, 2022
Sheet	58 of 69

地平线 Horizon Robotics

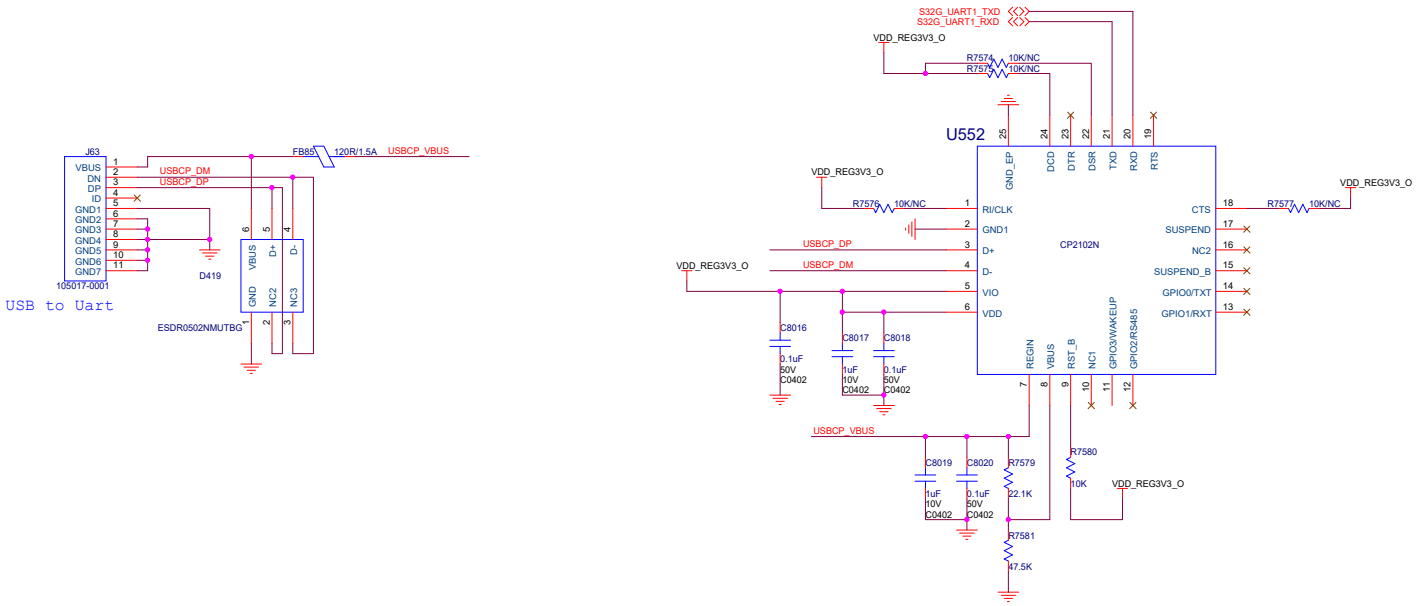

Page Name:	13_Debug_uart
Project:	<Title>
Rev:	<RevCode>
Designer:	
Date:	Saturday, April 23, 2022
Sheet	59 of 69

地平线 Horizon Robotics

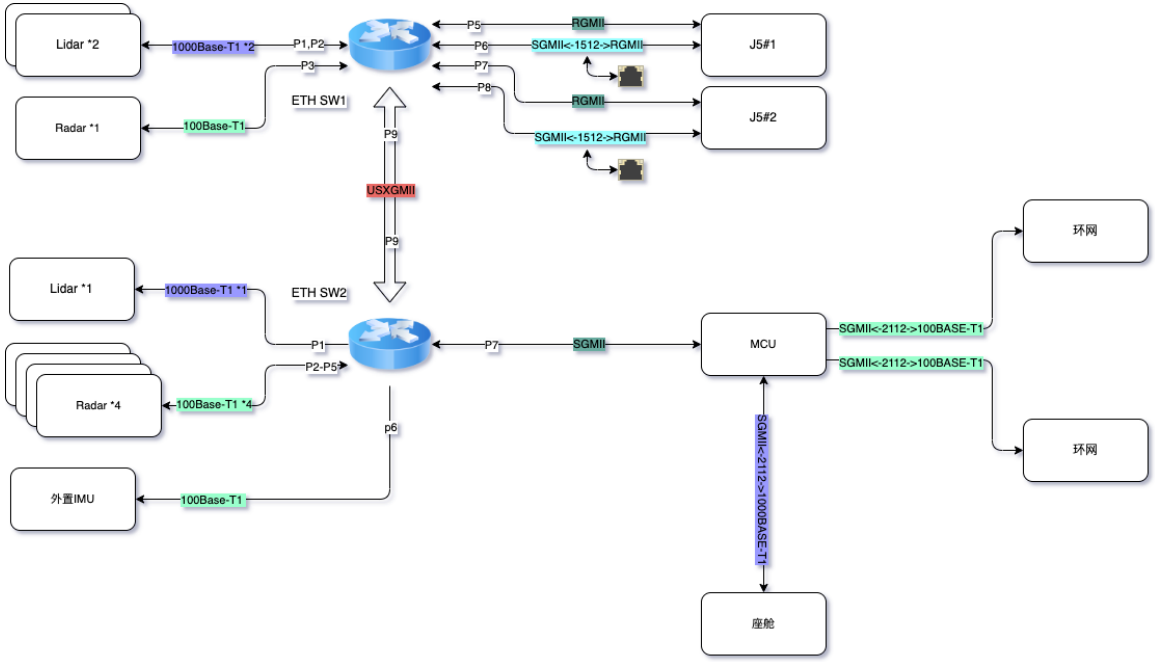

Black for general information
Green for notice
Red for pending

Horizon Robotics

CONFIDENTIAL

NAME: 01_ETH_BLOCK	VERSION: <Version>
PROJECT: MATRIX5_P3_2XJ5_0429-A	
DESIGNER: Horizon Hardware Team	
DRAWING DATE: Thursday, February 24, 2022	
PAGE: 60 of 69	

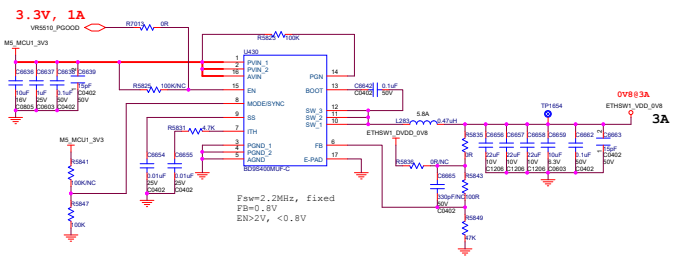

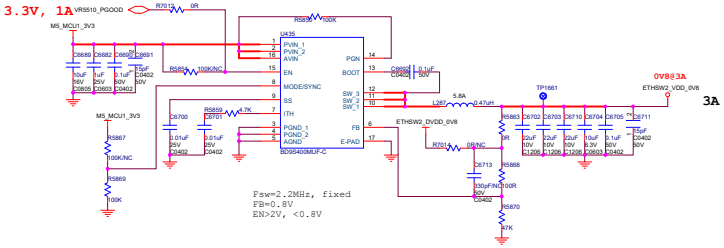

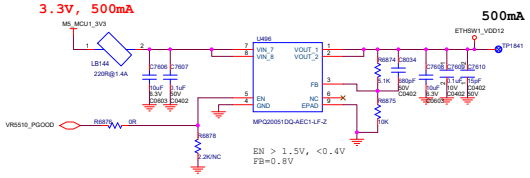

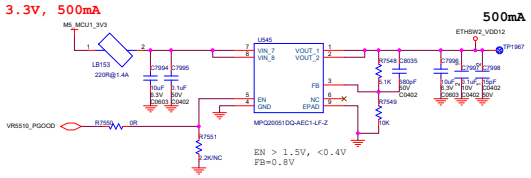

ETH SW power supply

PCIe SW power supply

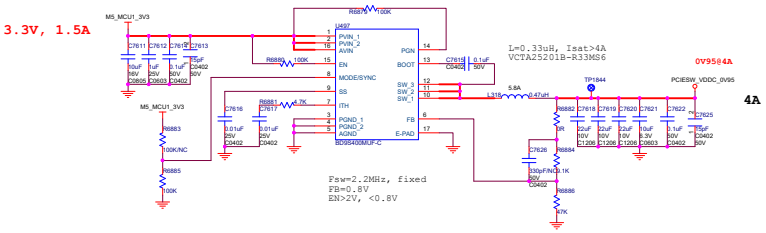

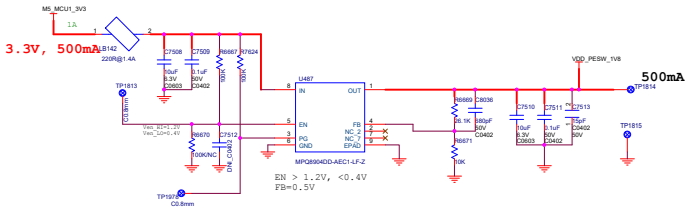

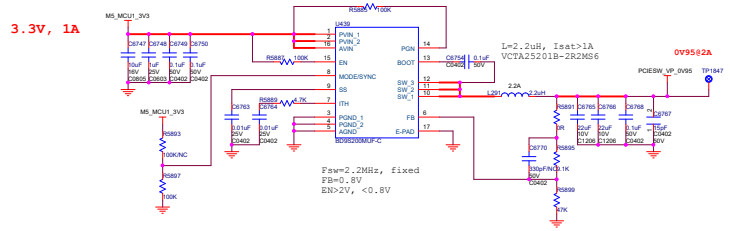

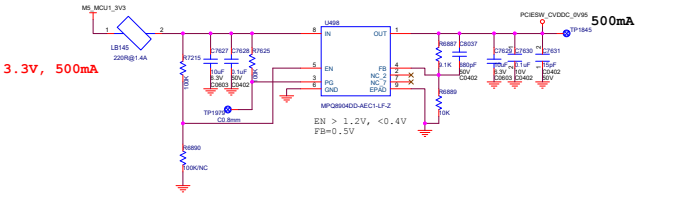

Horizon Robotics
CONFIDENTIAL
NAME: 02_PEIR_Power
VERSION: V1.0
PROJECT: M5_Board
DESIGNER: HR-HardWare
DRAWING DATE: 2021-03-15
PAGE: 61 of 69

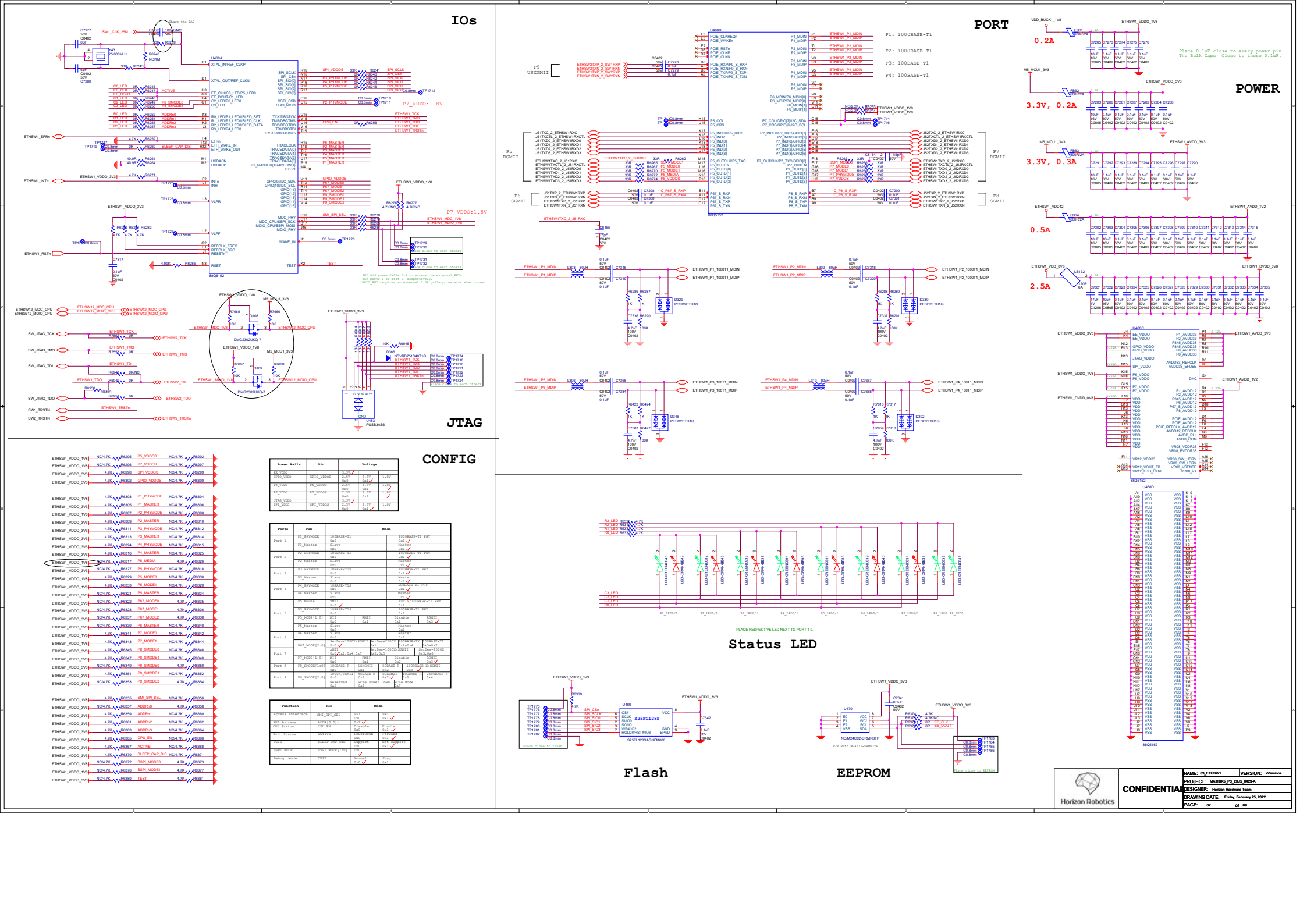
IOs
PORT
POWER
JTAG
CONFIG
Status LED
Flash
EEPROM
P7_VDDO:1.8V
P1: 1000BASE-T1
P2: 1000BASE-T1
P3: 100BASE-T1
P4: 100BASE-T1
0.2A
3.3V, 0.2A
3.3V, 0.3A
0.5A
2.5A
Place 0.1uF close to every power pin.
The Bulk Caps Close to these 0.1uF.
Horizon Robotics
CONFIDENTIAL
NAME: 03_ETHSW1
VERSION: <Version>
PROJECT: MATRIX5_P5_2XU5_043-A
DESIGNER: Horizon Hardware Team
DRAWING DATE: Friday, February 25, 2022
PAGE: 62 of 69

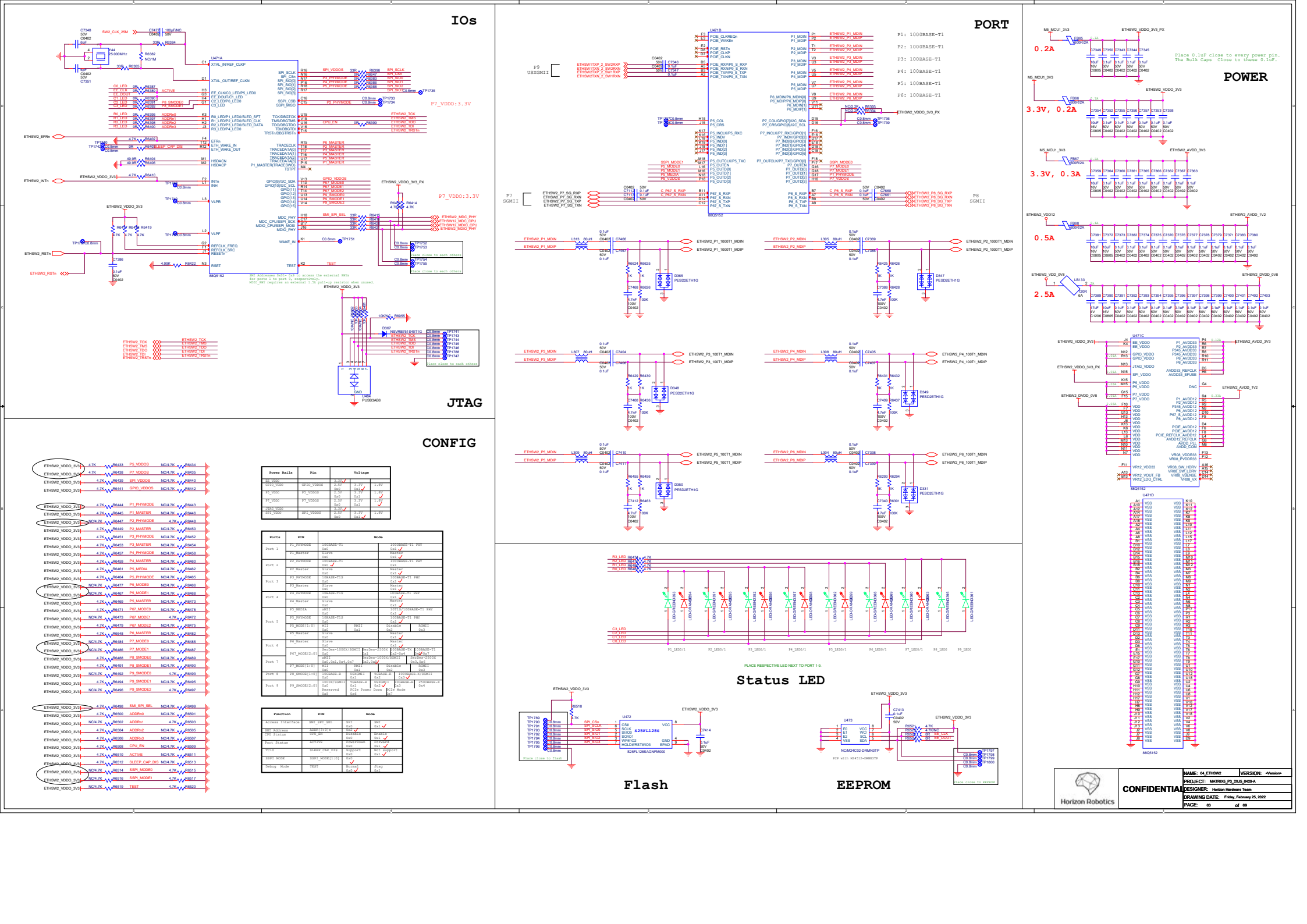
IOs
JTAG
CONFIG
PORT
Status LED
Flash
EEPROM
POWER
P7_VDDO:3.3V
P1: 1000BASE-T1
P2: 1000BASE-T1
P3: 100BASE-T1
P4: 100BASE-T1
P5: 100BASE-T1
P6: 100BASE-T1
0.2A
3.3V, 0.2A
3.3V, 0.3A
0.5A
2.5A
CONFIDENTIAL
Horizon Robotics
NAME: 04_ETHSW2
VERSION: <Version>
PROJECT: MATRIX5_P5_2XU5_0430-A
DESIGNER: Horizon Hardware Team
DRAWING DATE: Friday, February 25, 2022
PAGE: 63 of 69

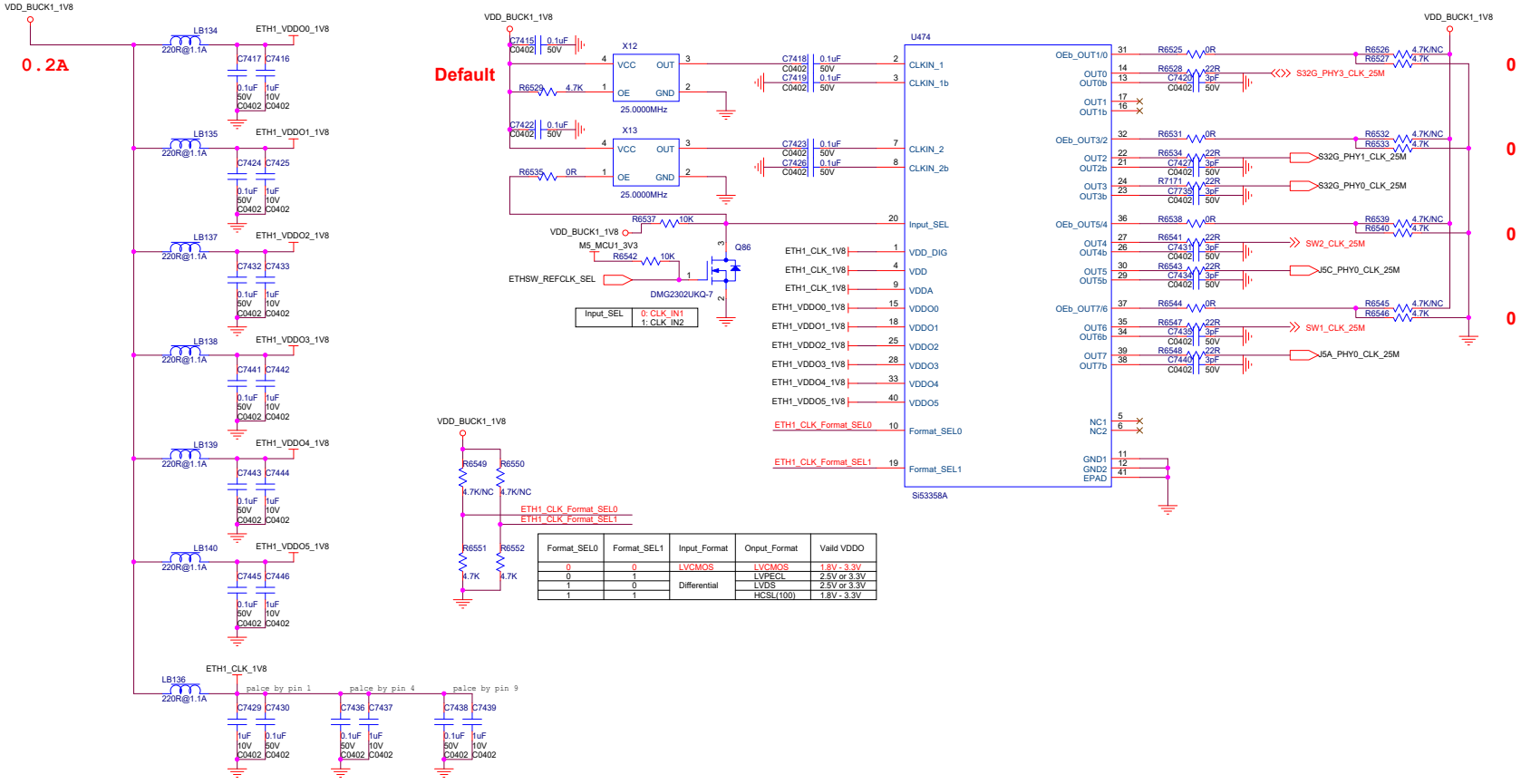

Format_SEL0	Format_SEL1	Input_Format	Onput_Format	Vaild VDDO
0	0	LVCMOS	LVCMOS	1.8V - 3.3V
0	1	Differential	LVPECL	2.5V or 3.3V
1	0		LVDS	2.5V or 3.3V
1	1		HCSL(100)	1.8V - 3.3V

Horizon Robotics

CONFIDENTIAL

NAME: 05_ETH_CLK	VERSION: V1.0
PROJECT: M5_Board	
DESIGNER: HR-HardWare	
DRAWING DATE: 2021-03-15	
PAGE: 64 of 69	

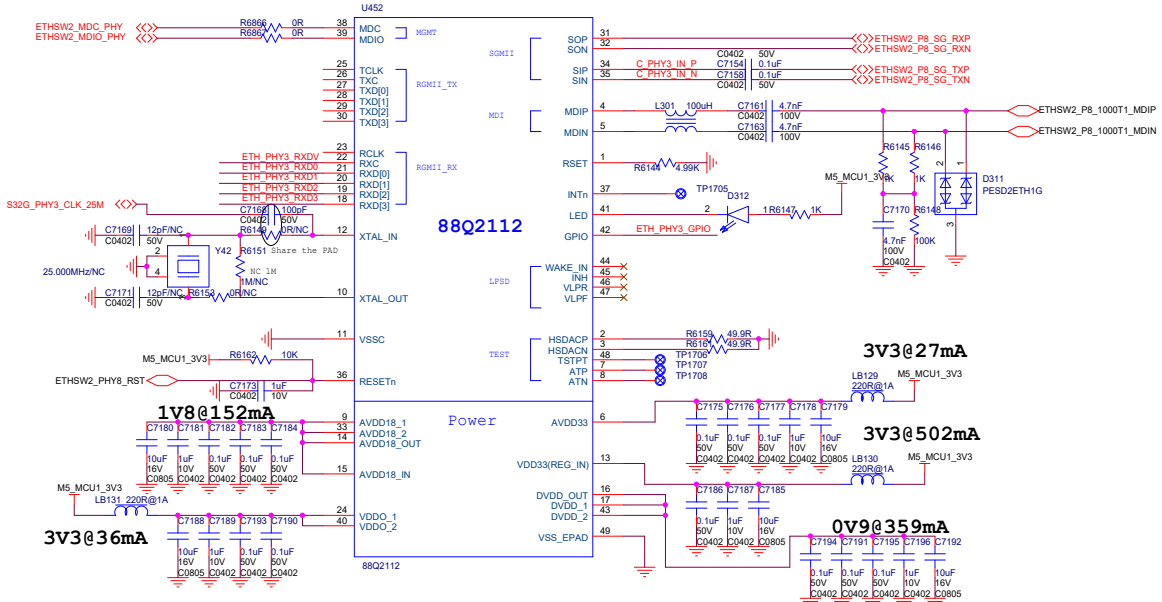

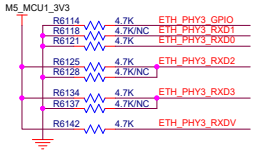

88Q2112:

GPIO	PHY_ADDR[2]
RXD[1]	PHY_ADDR[1]
RXD[0]	PHY_ADDR[0]
RXD[3:2] (88Q2112)	00:100Base-T1,Master 01:100Base-T1,Slave 10:1000Base-T1,Master 11:1000Base-T1,Slave
RXCTL	0:RGMII Delay TX & RX Clock 1:SGMII

PHY_ADDR:101

SGMII, 1000Base-T1, Slave

地平线 Horizon Robotics

Page Name: 06_ETH_PHY	
Project: <Title>	Rev: <RevCode>
Designer:	
Date: Tuesday, April 19, 2022	
Sheet 65 of 69	

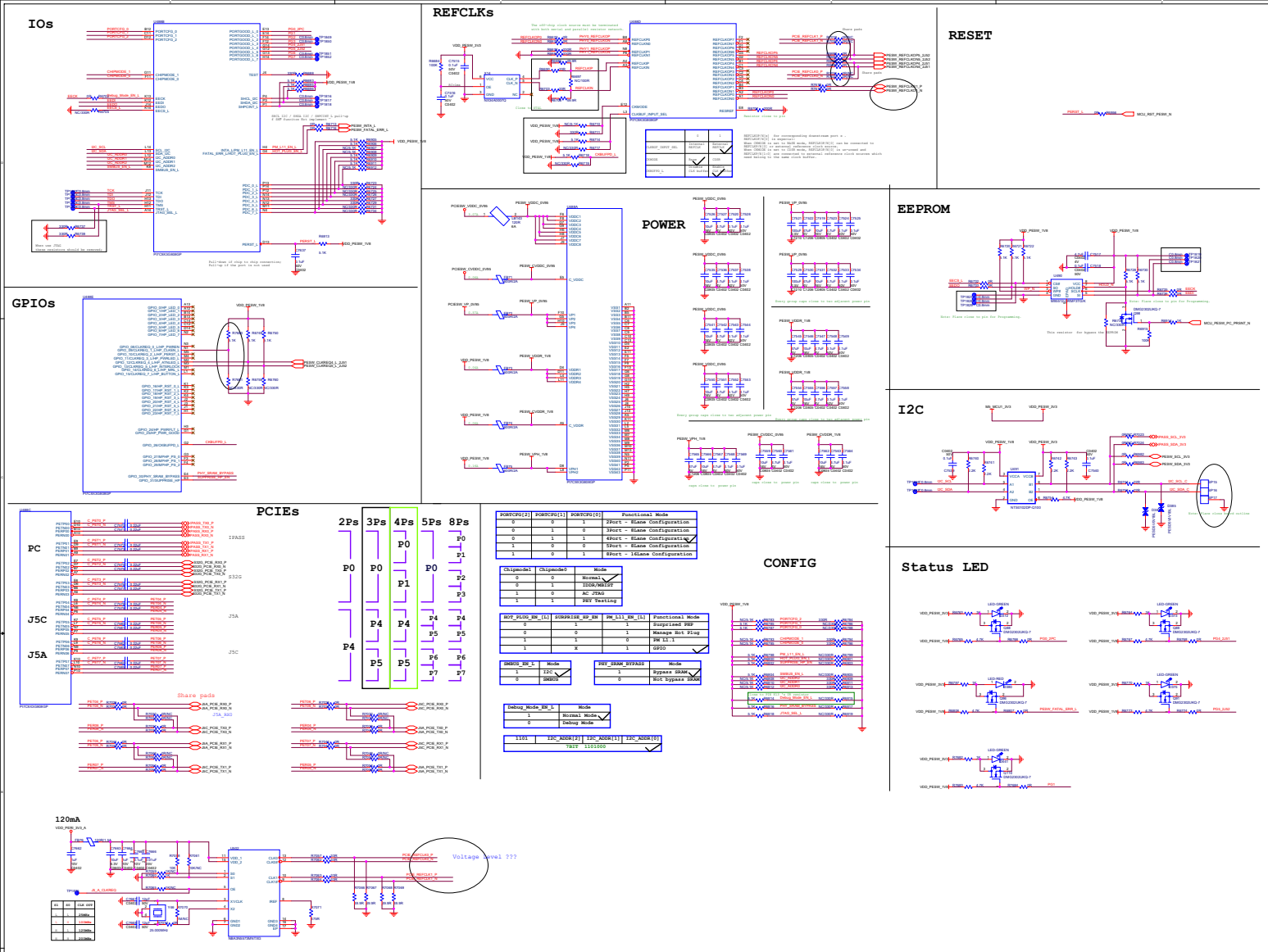

PORTCFG[2]	PORTCFG[1]	PORTCFG[0]	Functional Mode
0	0	1	2Port - 8Lane Configuration
0	1	0	3Port - 8Lane Configuration
0	1	1	4Port - 8Lane Configuration
1	0	0	5Port - 8Lane Configuration
1	0	1	8Port - 16Lane Configuration

Chipmode1	Chipmode0	Mode
0	0	Normal
0	1	IDDR/WRIST
1	0	AC JTAG
1	1	PHY Testing

HOT_PLUG_EN_[L]	SURPRISE_RP_EN	PM_L11_EN_[L]	Functional Mode
0	1	1	Surprised PRP
0	0	1	Manage Hot Plug
1	1	0	PM L1.1
1	X	1	GPIO

SMBUS_EN_L	Mode
1	I2C
0	SMBUS

PHY_SRAM_BYPASS	Mode
1	Bypass SRAM
0	Not bypass SRAM

Debug_Mode_EN_L	Mode
1	Normal Mode
0	Debug Mode

I101	I2C_ADDR[2]	I2C_ADDR[1]	I2C_ADDR[0]
7BIT 1101000			

Horizon Robotics

CONFIDENTIAL

NAME: 07_PCIE000	VERSION: 1.0x0x0x0
PROJECT: MATRIX_P3_PCIE_DCIN_A	
DESIGNER: Horizon Hardware Team	
DRAWING DATE: Friday, February 28, 2022	
PAGE: 66 of 69	

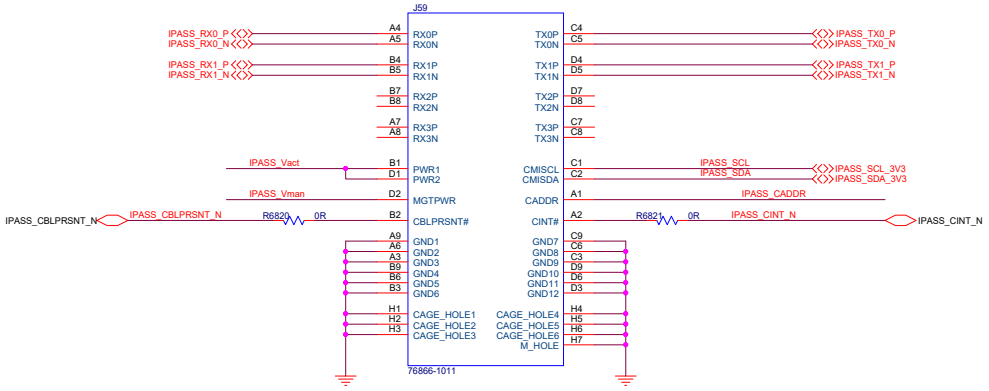

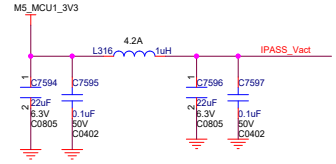

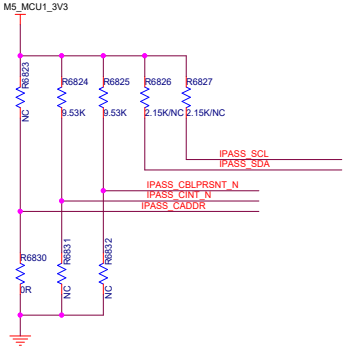

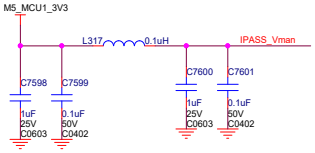

Page Name: 08_PCIE_CONN	
Project: <Title>	Rev: <RevCode>
Designer:	
Date: Thursday, April 28, 2022	
Sheet 67 of 69	

地平线 Horizon Robotics

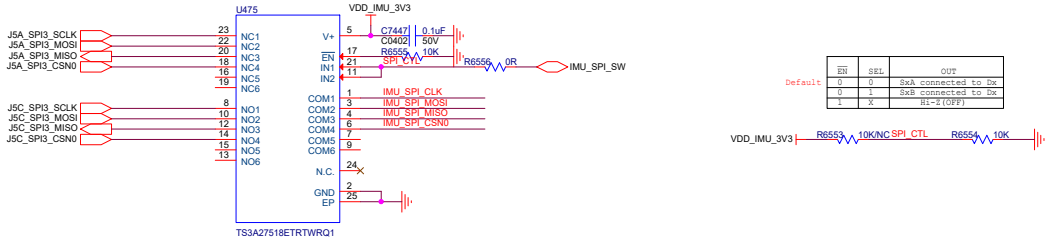

	EN	SEL	OUT
Default	0	0	SxA connected to Dx
	0	1	SxB connected to Dx
	1	X	Hi-Z(OFF)

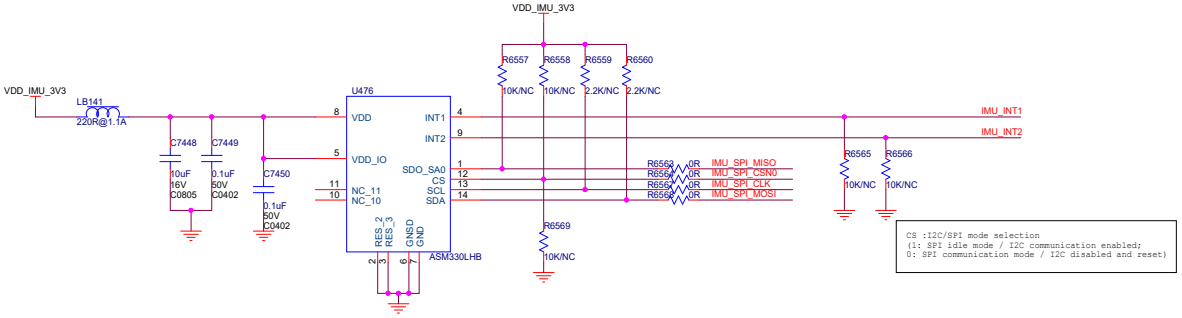

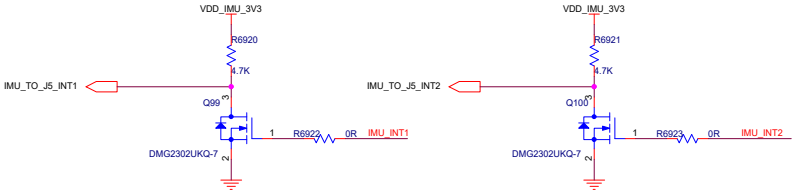

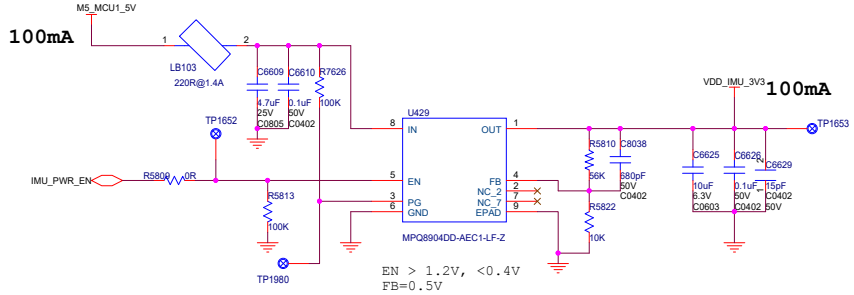

Horizon Robotics

CONFIDENTIAL

NAME: 09_IMU	VERSION: V1.0
PROJECT: M5_Board	
DESIGNER: HR-HardWare	
DRAWING DATE: 2021-03-15	
PAGE: 68 of 69	

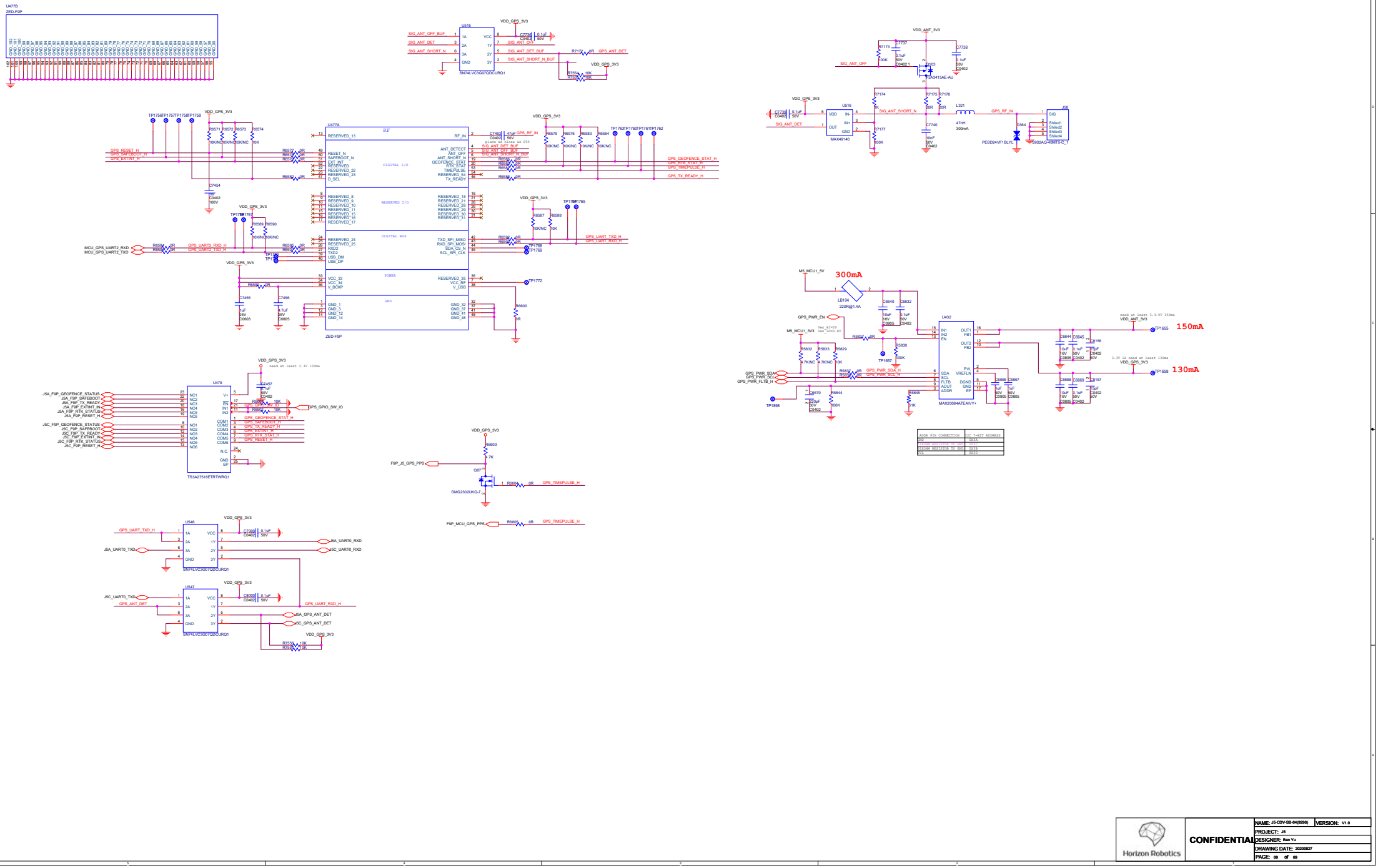
U477B
ZED-F9P
U515
SN74LVC3G07DDCURQ1
SIG_ANT_OFF_BUF
SIG_ANT_DET
SIG_ANT_SHORT_N
SIG_ANT_DET_BUF
SIG_ANT_SHORT_N_BUF
SIG_ANT_OFF
GPS_ANT_DET
VDD_GPS_3V3
U516
MAX49140
SIG_ANT_SHORT_N
SIG_ANT_DET
GPS_RF_IN
L321
47nH
300mA
J58
PESD24VF1BLYL
SIG
Shield1
Shield2
Shield3
Shield4
SMA-SMT-SMT-SMT-SMT
U477A
ZED-F9P
RF
DIGITAL I/O
RESERVED I/O
DIGITAL BUS
POWER
GND
RESERVED_13
RF_IN
RESET_N
SAFEBOOT_N
EXT_INT
RESERVED
RESERVED_22
RESERVED_23
D_SEL
ANT_DETECT
ANT_OFF
ANT_SHORT_N
GEOFENCE_STAT
RTK_STAT
TIMEPULSE
RESERVED_54
TX_READY
RESERVED_8
RESERVED_9
RESERVED_10
RESERVED_11
RESERVED_15
RESERVED_16
RESERVED_17
RESERVED_18
RESERVED_21
RESERVED_28
RESERVED_29
RESERVED_30
RESERVED_31
RESERVED_24
RESERVED_25
RXD2
TXD2
USB_DM
USB_DP
TXD_SPI_MISO
RXD_SPI_MOSI
SDA_CS_N
SCL_SPI_CLK
VCC_33
VCC_34
V_BCKP
RESERVED_35
VCC_RF
V_USB
GND_1
GND_3
GND_12
GND_14
GND_32
GND_37
GND_41
GND_48
GPS_RESET_H
GPS_SAFEBOOT_H
GPS_EXTINT_H
GPS_GEOFENCE_STAT_H
GPS_RTK_STAT_H
GPS_TIMEPULSE_H
GPS_TX_READY_H
GPS_UART2_RXD_H
GPS_UART2_TXD_H
GPS_UART_TXD_H
GPS_UART_RXD_H
MCU_GPS_UART2_RXD
MCU_GPS_UART2_TXD
M5_MCU1_5V
300mA
LB104
220R@1.4A
GPS_PWR_EN
M5_MCU1_3V3
U432
MAX20084ATEA/V+T
150mA
130mA
GPS_PWR_SDA
GPS_PWR_SCL
GPS_PWR_FLTB_H
GPS_PWR_SDA_H
GPS_PWR_SCL_H
U479
TS3A27518ETRTWRQ1
JSA_F9P_GEOFENCE_STATUS
JSA_F9P_SAFEBOOT
JSA_F9P_TX_READY
JSA_F9P_EXTINT_IN
JSA_F9P_RTK_STATUS
JSA_F9P_RESET_H
JSC_F9P_GEOFENCE_STATUS
JSC_F9P_SAFEBOOT
JSC_F9P_TX_READY
JSC_F9P_EXTINT_IN
JSC_F9P_RTK_STATUS
JSC_F9P_RESET_H
GPS_GPIO_SW_IO
U546
U547
SN74LVC3G07QDCURQ1
JSA_UART0_TXD
JSA_UART0_RXD
JSC_UART0_TXD
JSC_UART0_RXD
GPS_ANT_DET
JSA_GPS_ANT_DET
JSC_GPS_ANT_DET
F9P_J5_GPS_PPS
F9P_MCU_GPS_PPS
GPS_TIMEPULSE_H
DMG2302UKQ-7
ADDR PIN CONNECTION
I2C 7-BIT ADDRESS
GND
51A
FLOAT
52
PULLUP RESISTOR TO SDA
53
PULLUP RESISTOR TO SCL
54
VCC
55
Horizon Robotics
CONFIDENTIAL
NAME: J5-CDV-SB-04(9296)
VERSION: V1.0
PROJECT: J5
DESIGNER: Ban Yu
DRAWING DATE: 20200827
PAGE: 69 of 69